SILICON N-CHANNEL DUAL GATE MOS-FET

BF980

Depletion type field-effect transistor in a plastic X-package with source and substrate interconnected, intended for u.h.f. applications, such as u.h.f. television tuners, with 12 V supply voltage.

This MOS-FET tetrode is protected against excessive input voltage surges by integrated back-to-back diodes between gates and source.

QUICK REFERENCE DATA

Drain-source voltage	V_{DS}	max.	18	V
Drain current	I_D	max.	30	mA
Total power dissipation up to T_{amb} = 75 °C	P_{tot}	max.	225	mW
Junction temperature	T_j	max.	150	°C
Transfer admittance at f = 1 kHz I_D = 10 mA; V_{DS} = 10 V; $+V_{G2-S}$ = 4 V	$\|y_{fs}\|$	typ.	19	mS
Feedback capacitance at f = 1 MHz I_D = 10 mA; V_{DS} = 10 V; $+V_{G2-S}$ = 4 V	C_{rs}	typ.	25	fF
Noise figure at G_S = 5 mS; B_S = B_S opt I_D = 10 mA; V_{DS} = 10 V; $+V_{G2-S}$ = 4 V; f = 800 MHz	F	typ.	2,8	dB

MECHANICAL DATA

Dimensions in mm

Fig. 1 SOT-103.

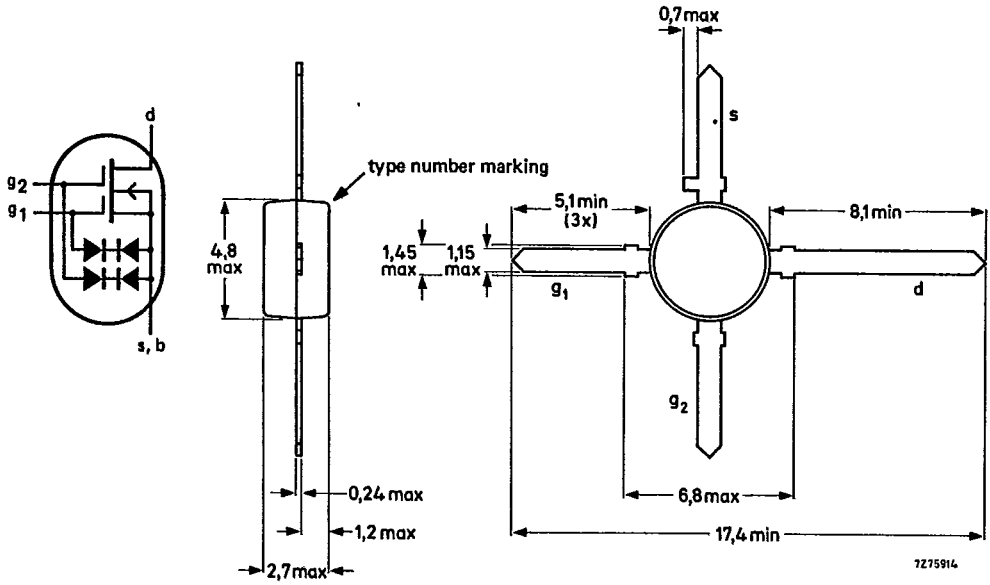

RATINGS

Limiting values in accordance with the Absolute Maximum System (IEC 134)

Drain-source voltage	V_{DS}	max.	18	V
Drain current (d.c. or average)	I_D	max.	30	mA
Gate 1 - source current	$\pm I_{G1-S}$	max.	10	mA
Gate 2 - source current	$\pm I_{G2-S}$	max.	10	mA
Total power dissipation up to T_{amb} = 75 °C	P_{tot}	max.	225	mW
Storage temperature	T_{stg}	−65 to +150		°C
Junction temperature	T_j	max.	150	°C

THERMAL RESISTANCE

From junction to ambient in free air mounted on the printed-circuit board (see Fig. 2)	$R_{th\ j-a}$	=	335	K/W

Dimensions in mm

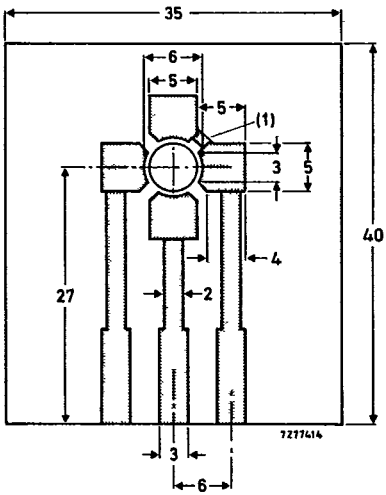

(1) Connection made by a strip or Cu wire.

Fig. 2 Single-sided 35 μm Cu-clad epoxy fibre-glass printed-circuit board, thickness 1,5 mm. Tracks are fully tin-lead plated. Board in horizontal position for R_{th} measurement.

STATIC CHARACTERISTICS

T_{amb} = 25 °C

Gate cut-off currents			
$\pm V_{G1\text{-}S} = 7$ V; $V_{G2\text{-}S} = V_{DS} = 0$	$\pm I_{G1\text{-}SS}$	<	25 nA
$\pm V_{G2\text{-}S} = 7$ V; $V_{G1\text{-}S} = V_{DS} = 0$	$\pm I_{G2\text{-}SS}$	<	25 nA
Gate-source breakdown voltages			
$\pm I_{G1\text{-}SS} = 10$ mA; $V_{G2\text{-}S} = V_{DS} = 0$	$\pm V_{(BR)G1\text{-}SS}$	>	8 V
$\pm I_{G2\text{-}SS} = 10$ mA; $V_{G1\text{-}S} = V_{DS} = 0$	$\pm V_{(BR)G2\text{-}SS}$	>	8 V
Gate-source cut-off voltages			
$I_D = 20\ \mu A$; $V_{DS} = 10$ V; $+V_{G2\text{-}S} = 4$ V	$-V_{(P)G1\text{-}S}$	<	1,3 V
		>	0,2 V
$I_D = 20\ \mu A$; $V_{DS} = 10$ V; $V_{G1\text{-}S} = 0$	$-V_{(P)G2\text{-}S}$	<	1,1 V
		>	0,2 V

DYNAMIC CHARACTERISTICS

Measuring conditions (common source): $I_D = 10$ mA; $V_{DS} = 10$ V; $+V_{G2\text{-}S} = 4$ V; T_{amb} = 25 °C

Transfer admittance at f = 1 kHz	$\lvert y_{fs} \rvert$	>	17 mS
		typ.	19 mS
Input capacitance at gate 1; f = 1 MHz	$C_{ig1\text{-}s}$	<	3,0 pF
		typ.	2,6 pF
Feedback capacitance at f = 1 MHz	C_{rs}	<	35 fF
		typ.	25 fF
Output capacitance at f = 1 MHz	C_{os}	<	1,3 pF
		typ.	1,1 pF
Noise figure at f = 800 MHz; $G_S = 5$ mS; $B_S = B_S$ opt	F	<	3,9 dB
		typ.	2,8 dB