## Mixers

**S 042 P**

**Bipolar IC**

### Features

- Versatile application
- Wide range of supply voltage
- Few external components
- High conversion transconductance
- Low noise figure

| Type | Ordering Code | Package |
|---|---|---|
| S 042 P | Q67000-A335 | P-DIP-14 |

Symmetrical mixer for frequencies up to 200 MHz. It can be driven by an external source or by the built-in oscillator. The input signals are suppressed at the outputs. In addition to the usual mixer applications in receivers, converters, and demodulators for AM and FM, the S 042 P can also be used as electronic polarity switch, multiplier etc.

### Absolute Maximum Ratings

| Parameter | Symbol | Limit Values | Unit |
|---|---|---|---|
| Supply voltage | $V_S$ | 15 | V |
| Junction temperature | $T_j$ | 150 | °C |
| Storage temperature range | $T_{stg}$ | – 40 to 125 | °C |
| Thermal resistance (system-air) . | $R_{th\,SA}$ | 90 | K/W |

### Operating Range

| | | | |
|---|---|---|---|
| Supply voltage | $V_S$ | 4 to 15 | V |
| Ambient temperature | $T_A$ | –15 to 70 | °C |



Be sure to visit ChipDocs site for more information
http://www.chipdocs.com

## Characteristics

$V_S$ = 12 V, $T_A$ = 25 °C

| Parameter | Symbol | Limit Values | | | Unit |
|---|---|---|---|---|---|
| | | min. | typ. | max. | |
| Current consumption | $I_S = I_2 + I_3 + I_5$ | 1.4 | 2.15 | 2.9 | mA |
| Output current | $I_2 = I_3$ | 0.36 | 0.52 | 0.68 | mA |
| Output current difference | $I_3 - I_2$ | –60 | | 60 | µA |
| Supply current | $I_5$ | 0.7 | 1.1 | 1.6 | mA |
| Power gain<br>$f_i$ = 100 MHz, $f_{OSC}$ = 110.7 MHz | $G_P$ | 14 | 16.5 | | dB |
| Breakdown voltage<br>$I_{2,3}$ = 10 mA; $V_{7,8}$ = 0 V | $V_2$, $V_3$ | 25 | | | V |
| Output capacitance | $C_{2\text{-}M}$, $C_{3\text{-}M}$ | | 6 | | pF |
| Conversion transconductance<br>$f$ = 455 kHz | $S = \frac{I_2}{V_7 - V_8} = \frac{I_3}{V_7 - V_8}$ | | 5 | | mS |
| Noise figure | $NF$ | | 7 | | dB |

## Test Circuit

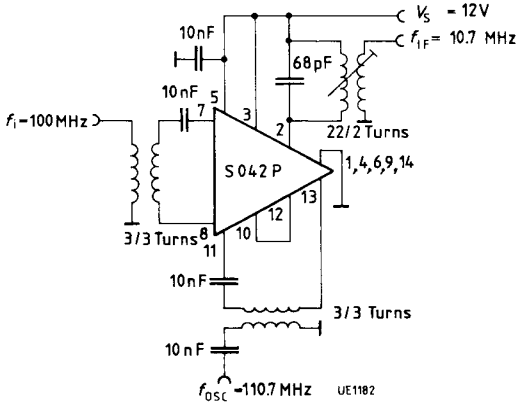




Be sure to visit ChipDocs site for more information
http://www.chipdocs.com

## Circuit Diagram

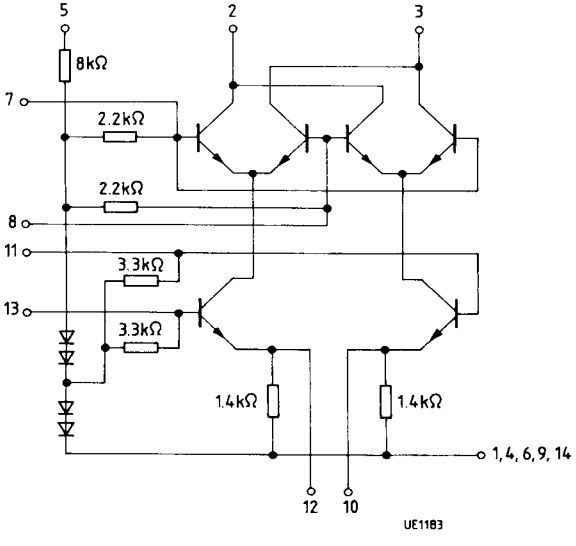


A galvanic connection between pins 7 and 8 and pins 11 and 13 through coupling windings is recommended.

A resistor of at least 220 Ω may be connected between pins 10 and 14 (ground) and between pins 12 and 14 to increase the currents and thus the conversion transconductance. Pins 10 and 12 may be connected through any impedance. In case of a direct connection between pins 10 and 12, the resistance from this pin to 14 may be at least 100 Ω. Depending on the layout, a capacitor (10 to 50 pF) may be required between pins 7 and 8 to prevent oscillations in the VHF band.



Be sure to visit ChipDocs site for more information
http://www.chipdocs.com

**Total current consumption versus supply voltage**

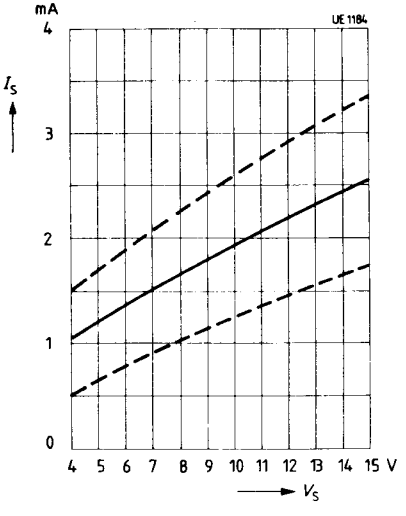


**Output current versus supply voltage**

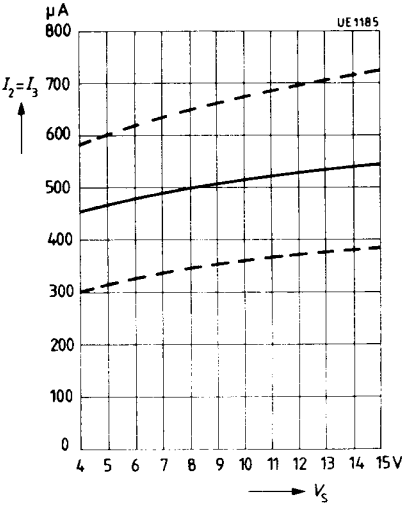


**Power gain versus supply voltage**

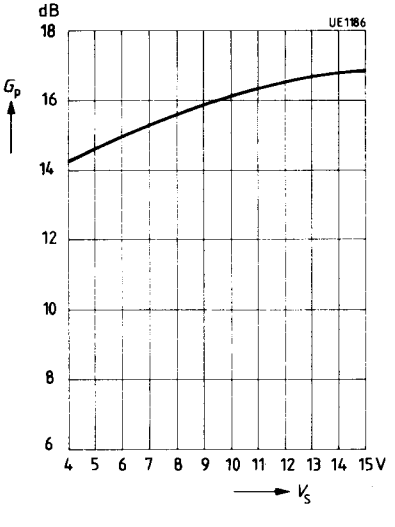




Be sure to visit ChipDocs site for more information
http://www.chipdocs.com

## Application Circuits

**FM Mixer** with inductive tuning

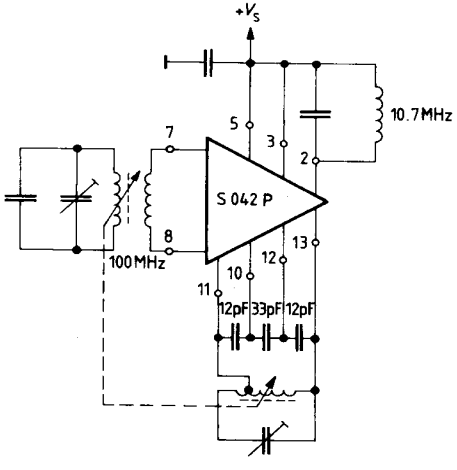


**FM Mixer** with crystal oscillator

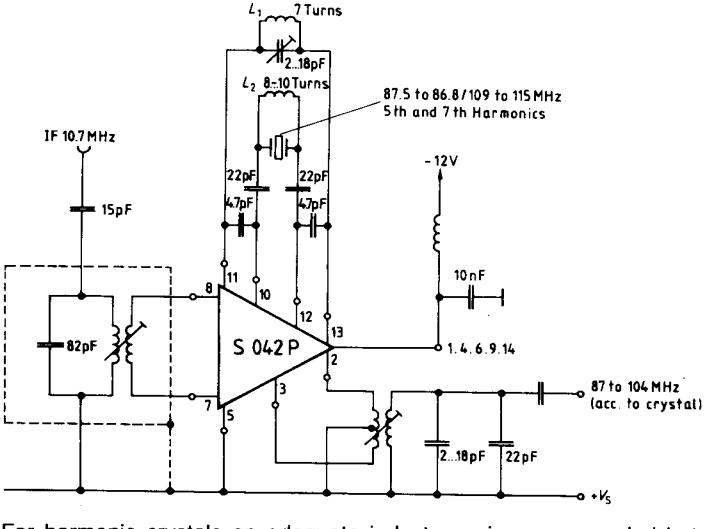


For harmonic crystals an adequate inductance is recommended between pins 10 and 12 to avoid oscillations to the fundamental.



Be sure to visit ChipDocs site for more information
http://www.chipdocs.com

**Mixer for Short-Wave Application**
in self-oscillating operation

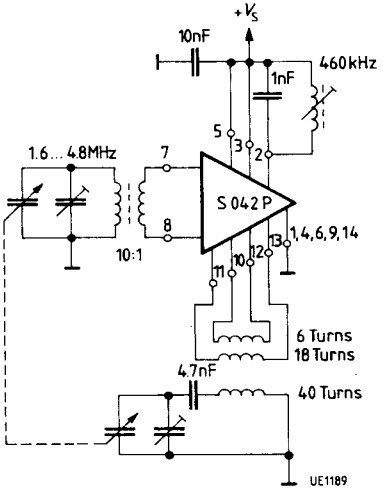


**Differential Amplifier** with internal neutralization, also suited for use as limiter for frequencies up to 50 MHz or at higher currents up to 100 MHz

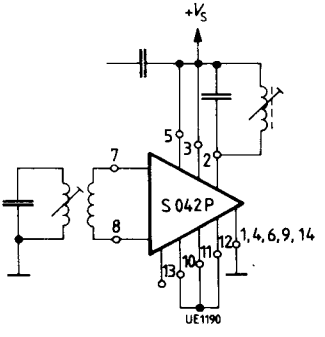




Be sure to visit ChipDocs site for more information
http://www.chipdocs.com