- **Direct Upgrades to TL05x, TL07x, and TL08x BiFET Operational Amplifiers**
- **Greater Than 2× Bandwidth (10 MHz) and 3× Slew Rate (45 V/μs) Than TL07x**
- **Ensured Maximum Noise Floor 17 nV/√Hz**
- **On-Chip Offset Voltage Trimming for Improved DC Performance**
- **Wider Supply Rails Increase Dynamic Signal Range to ±19 V**

description

The TLE207x series of JFET-input operational amplifiers more than double the bandwidth and triple the slew rate of the TL07x and TL08x families of BiFET operational amplifiers. Texas Instruments Excalibur process yields a typical noise floor of 11.6 nV/√Hz, 17-nV/√Hz ensured maximum, offering immediate improvement in noise-sensitive circuits designed using the TL07x. The TLE207x also has wider supply voltage rails, increasing the dynamic signal range for BiFET circuits to ±19 V. On-chip zener trimming of offset voltage yields precision grades for greater accuracy in dc-coupled applications. The TLE207x are pin-compatible with lower performance BiFET operational amplifiers for ease in improving performance in existing designs.

BiFET operational amplifiers offer the inherently higher input impedance of the JFET-input transistors, without sacrificing the output drive associated with bipolar amplifiers. This makes them better suited for interfacing with high-impedance sensors or very low-level ac signals. They also feature inherently better ac response than bipolar or CMOS devices having comparable power consumption.

The TLE207x family of BiFET amplifiers are Texas Instruments highest performance BiFETs, with tighter input offset voltage and ensured maximum noise specifications. Designers requiring less stringent specifications but seeking the improved ac characteristics of the TLE207x should consider the TLE208x operational amplifier family.

Because BiFET operational amplifiers are designed for use with dual power supplies, care must be taken to observe common-mode input voltage limits and output swing when operating from a single supply. DC biasing of the input signal is required and loads should be terminated to a virtual ground node at mid-supply. Texas Instruments TLE2426 integrated virtual ground generator is useful when operating BiFET amplifiers from single supplies.

The TLE207x are fully specified at ±15 V and ±5 V. For operation in low-voltage and/or single-supply systems, Texas Instruments LinCMOS families of operational amplifiers (TLC- and TLV-prefix) are recommended. When moving from BiFET to CMOS amplifiers, particular attention should be paid to slew rate and bandwidth requirements and output loading.

Please be aware that an important notice concerning availability, standard warranty, and use in critical applications of Texas Instruments semiconductor products and disclaimers thereto appears at the end of this data sheet.

PRODUCTION DATA information is current as of publication date. Products conform to specifications per the terms of Texas Instruments standard warranty. Production processing does not necessarily include testing of all parameters.

Copyright © 1997 – 2004, Texas Instruments Incorporated

TLE2071 AVAILABLE OPTIONS

T_A	V_{IO}max AT 25°C	PACKAGED DEVICES				
		SMALL OUTLINE† (D)	CHIP CARRIER (FK)	CERAMIC DIP (JG)	PLASTIC DIP (P)	CERAMIC FLAT PACK (U)
0°C to 70°C	2 mV 4 mV	TLE2071ACD TLE2071CD	—	—	TLE2071ACP TLE2071CP	—
−40°C to 85°C	2 mV 4 mV	TLE2071AID TLE2071ID	—	—	TLE2071AIP TLE2071IP	—
−55°C to 125°C	2 mV 4 mV	— —	TLE2071AMFK TLE2071MFK	TLE2071AMJG TLE2071MJG	— —	TLE2071AMU TLE2071MU

† The D packages are available taped and reeled. Add R suffix to device type (e.g., TLE2071ACDR).

TLE2072 AVAILABLE OPTIONS

T_A	V_{IO}max AT 25°C	PACKAGED DEVICES				
		SMALL OUTLINE† (D)	CHIP CARRIER (FK)	CERAMIC DIP (JG)	PLASTIC DIP (P)	CERAMIC FLAT PACK (U)
0°C to 70°C	3.5 mV 6 mV	TLE2072ACD TLE2072CD	—	—	TLE2072ACP TLE2072CP	—
−40°C to 85°C	3.5 mV 6 mV	TLE2072AID TLE2072ID	—	—	TLE2072AIP TLE2072IP	—
−55°C to 125°C	3.5 mV 6 mV	—	TLE2072AMFK TLE2072MFK	TLE2072AMJG TLE2072MJG	—	TLE2072AMU TLE2072MU

† The D packages are available taped and reeled. Add R suffix to device type (e.g., TLE2072ACDR).

TLE2074 AVAILABLE OPTIONS

T_A	V_{IO}max AT 25°C	PACKAGED DEVICES				
		SMALL OUTLINE† (DW)	CHIP CARRIER (FK)	CERAMIC DIP (J)	PLASTIC DIP (N)	CERAMIC FLAT PACK (W)
0°C to 70°C	3 mV 5 mV	TLE2074ACDW TLE2074CDW	—	—	TLE2074ACN TLE2074CN	—
−40°C to 85°C	3 mV 5 mV	TLE2074AIDW TLE2074IDW	—	—	TLE2074AIN TLE2074IN	—
−55°C to 125°C	3 mV 5 mV	—	TLE2074AMFK TLE2074MFK	TLE2074AMJ TLE2074MJ	—	TLE2074AMW TLE2074MW

† The DW packages are available taped and reeled. Add R suffix to device type (e.g., TLE2074ACDWR).

symbol

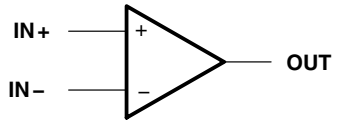

TLE2071 AND TLE2071A
D, JG, OR P PACKAGE
(TOP VIEW)

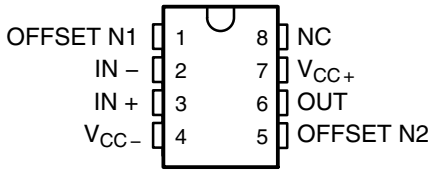

TLE2072 AND TLE2072A
D, JG, OR P PACKAGE
(TOP VIEW)

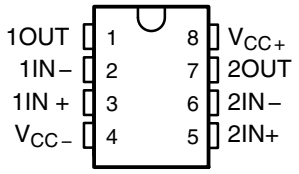

TLE2074 AND TLE2074A
J, N, OR W PACKAGE
(TOP VIEW)

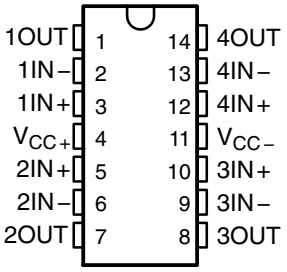

TLE2074 AND TLE2074A
DW PACKAGE
(TOP VIEW)

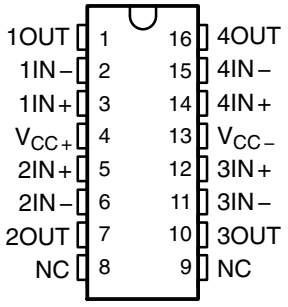

TLE2071M AND TLE2071AM
FK PACKAGE
(TOP VIEW)

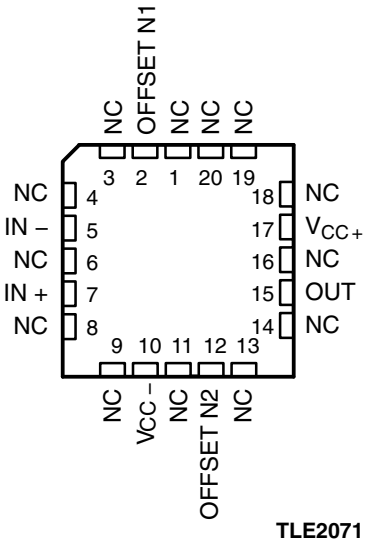

TLE2072M AND TLE2072AM
FK PACKAGE
(TOP VIEW)

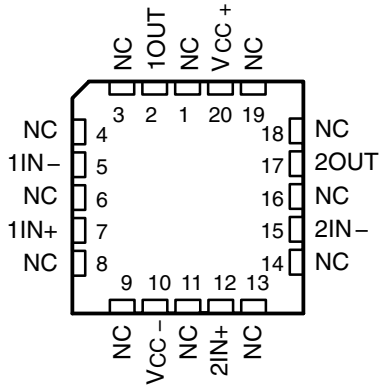

TLE2074M AND TLE2074AM
FK PACKAGE
(TOP VIEW)

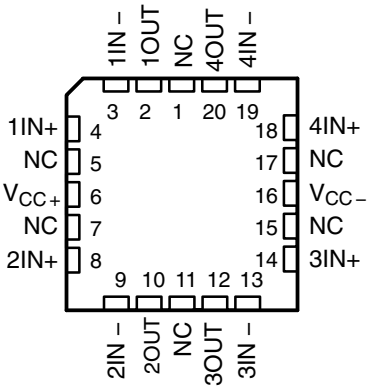

TLE2071 AND TLE2071A
U PACKAGE
(TOP VIEW)

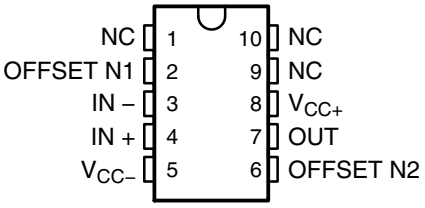

TLE2072 AND TLE2072A
U PACKAGE
(TOP VIEW)

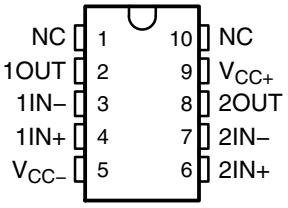

NC – No internal connection

equivalent schematic

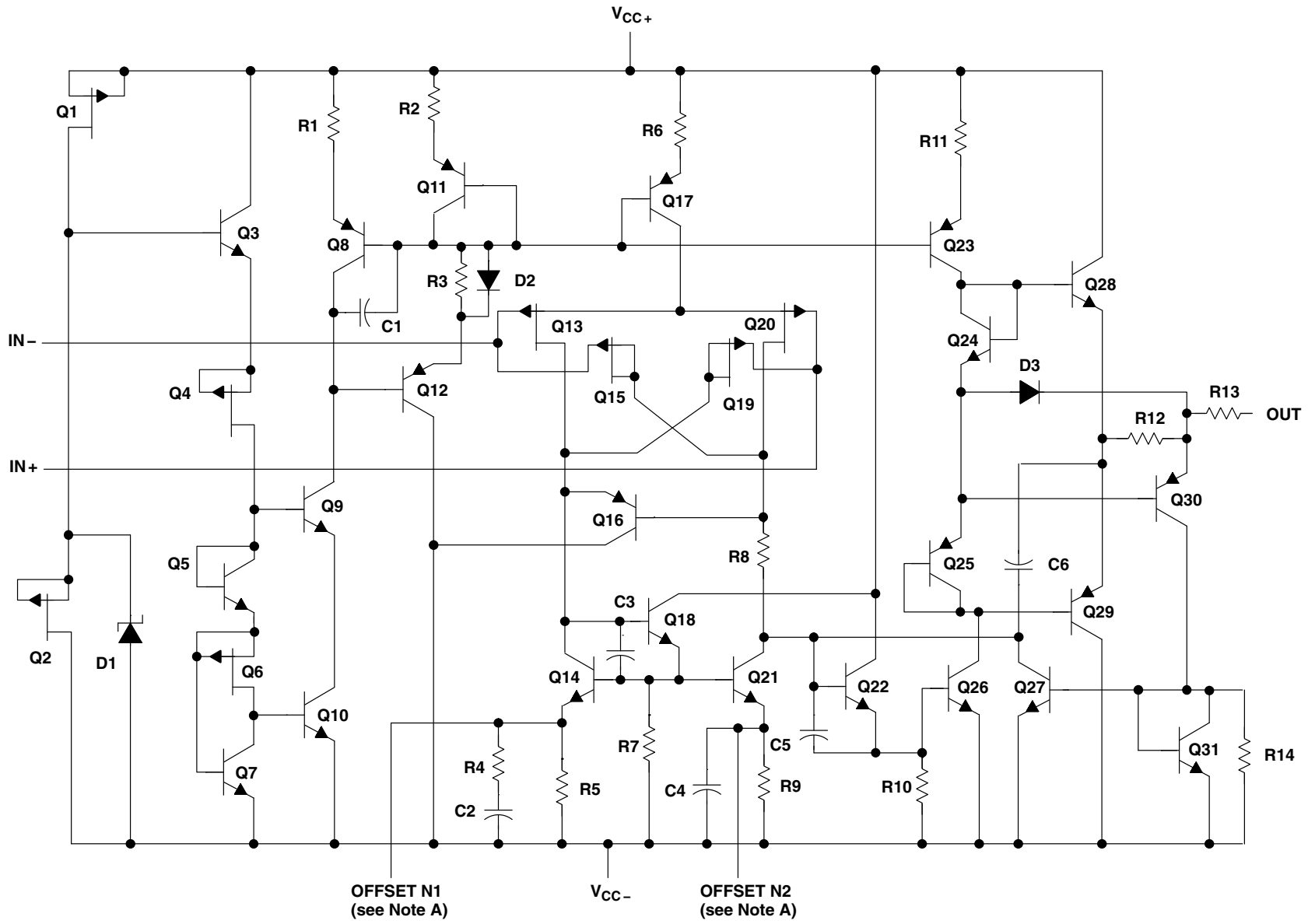

NOTES: A. OFFSET N1 AND OFFSET N2 are only availiable on the TLE2071x devices.

equivalent schematic (continued)

ACTUAL DEVICE COMPONENT COUNT			
COMPONENT	**TLE2071**	**TLE2072**	**TLE2074**
Transistors	33	57	114
Resistors	25	37	74
Diodes	8	5	10
Capacitors	6	11	22

absolute maximum ratings over operating free-air temperature range (unless otherwise noted)†

Supply voltage, V_{CC+} (see Note 1)		19 V
Supply voltage, V_{CC-} (see Note 1)		−19 V
Differential input voltage range, V_{ID} (see Note 2)		V_{CC+} to V_{CC-}
Input voltage range, V_I (any input)		V_{CC+} to V_{CC-}
Input current, I_I (each input)		±1 mA
Output current, I_O (each output)		±80 mA
Total current into V_{CC+}		160 mA
Total current out of V_{CC-}		160 mA
Duration of short-circuit current at (or below) 25°C (see Note 3)		unlimited
Package thermal impedance, θ_{JA} (see Notes 4 and 5):	D package	97.1°C/W
	DW package	57.3°C/W
	N package	79.7°C/W
	P package	84.6°C/W
Package thermal impedance, θ_{JC} (see Notes 4 and 5):	FK package	5.6°C/W
	J package	15.1°C/W
	JG package	14.5°C/W
	U package	14.7°C/W
	W package	10°C/W
Operating free-air temperature range, T_A:	C suffix	0°C to 70°C
	I suffix	−40°C to 85°C
	M suffix	−55°C to 125°C
Storage temperature range		−65°C to 150°C
Case temperature for 60 seconds: FK package		260°C
Lead temperature 1,6 mm (1/16 inch) from case for 10 seconds: DW or N package		260°C
Lead temperature 1,6 mm (1/16 inch) from case for 60 seconds: J, JG, U, or W package		300°C

† Stresses beyond those listed under "absolute maximum ratings" may cause permanent damage to the device. These are stress ratings only, and functional operation of the device at these or any other conditions beyond those indicated under "recommended operating conditions" is not implied. Exposure to absolute-maximum-rated conditions for extended periods may affect device reliability.

NOTES:
1. All voltage values, except differential voltages, are with respect to the midpoint between V_{CC+} and V_{CC-}.
2. Differential voltages are at the noninverting input with respect to the inverting input.
3. The output may be shorted to either supply. Temperatures and/or supply voltages must be limited to ensure that the maximum dissipation rate is not exceeded.
4. Maximum power dissipation is a function of $T_J(max)$, θ_{JA}, and T_A. The maximum allowable power dissipation at any allowable ambient temperature is $P_D = (T_J(max) - T_A)/\theta_{JA}$. Operating at the absolute maximum T_J of 150°C can affect reliability.
5. The package thermal impedance is calculated in accordance with JESD 51-7 (plastic) or MIL-STD-883 Method 1012 (ceramic).

recommended operating conditions

		C SUFFIX		I SUFFIX		M SUFFIX		UNIT
		MIN	MAX	MIN	MAX	MIN	MAX	
Supply voltage, $V_{CC\pm}$		±2.25	±19	±2.25	±19	±2.25	±19	V
Common-mode input voltage, V_{IC}	$V_{CC\pm}$ = ±5 V	−0.9	5	−0.8	5	−0.8	5	V
	$V_{CC\pm}$ = ±15 V	−10.9	15	−10.8	15	−10.8	15	
Operating free-air temperature, T_A		0	70	−40	85	−55	125	°C

TLE2071C electrical characteristics at specified free-air temperature, $V_{CC\pm}$ = ±5 V (unless otherwise noted)

PARAMETER		TEST CONDITIONS		T_A†	TLE2071C MIN	TLE2071C TYP	TLE2071C MAX	TLE2071AC MIN	TLE2071AC TYP	TLE2071AC MAX	UNIT
V_{IO}	Input offset voltage	V_{IC} = 0, V_O = 0, R_S = 50 Ω		25°C		0.34	4		0.3	2	mV
				Full range			6			4	
α_{VIO}	Temperature coefficient of input offset voltage			Full range		3.2	29		3.2	29	μV/°C
I_{IO}	Input offset current	V_{IC} = 0, V_O = 0, See Figure 4		25°C		5	100		5	100	pA
				Full range			1.4			1.4	nA
I_{IB}	Input bias current			25°C		15	175		15	175	pA
				Full range			5			5	nA
V_{ICR}	Common-mode input voltage range	R_S = 50 Ω		25°C	5 to −1	5 to −1.9		5 to −1	5 to −1.9		V
				Full range	5 to −0.9			5 to −0.9			
V_{OM+}	Maximum positive peak output voltage swing	I_O = −200 μA		25°C	3.8	4.1		3.8	4.1		V
				Full range	3.7			3.7			
		I_O = −2 mA		25°C	3.5	3.9		3.5	3.9		
				Full range	3.4			3.4			
		I_O = −20 mA		25°C	1.5	2.3		1.5	2.3		
				Full range	1.5			1.5			
V_{OM-}	Maximum negative peak output voltage swing	I_O = 200 μA		25°C	−3.5	−4.2		−3.5	−4.2		V
				Full range	−3.4			−3.4			
		I_O = 2 mA		25°C	−3.7	−4.1		−3.7	−4.1		
				Full range	−3.6			−3.6			
		I_O = 20 mA		25°C	−1.5	−2.4		−1.5	−2.4		
				Full range	−1.5			−1.5			
A_{VD}	Large-signal differential voltage amplification	V_O = ± 2.3 V	R_L = 600 Ω	25°C	80	91		80	91		dB
				Full range	79			79			
			R_L = 2 kΩ	25°C	90	100		90	100		
				Full range	89			89			
			R_L = 10 kΩ	25°C	95	106		95	106		
				Full range	94			94			
r_i	Input resistance	V_{IC} = 0		25°C		10^{12}			10^{12}		Ω
c_i	Input capacitance	V_{IC} = 0, See Figure 5	Common mode	25°C		11			11		pF
			Differential	25°C		2.5			2.5		
z_o	Open-loop output impedance	f = 1 MHz		25°C		80			80		Ω
CMRR	Common-mode rejection ratio	V_{IC} = V_{ICR}min, V_O = 0, R_S = 50 Ω		25°C	70	89		70	89		dB
				Full range	68			68			
k_{SVR}	Supply-voltage rejection ratio($\Delta V_{CC\pm}/\Delta V_{IO}$)	$V_{CC\pm}$ = ±5 V to ±15 V, V_O = 0, R_S = 50 Ω		25°C	82	99		82	99		dB
				Full range	80			80			

† Full range is 0°C to 70°C.

TLE2071C electrical characteristics at specified free-air temperature, $V_{CC\pm}$ = ±5 V (unless otherwise noted) (continued)

PARAMETER		TEST CONDITIONS		T_A†	TLE2071C			TLE2071AC			UNIT
					MIN	TYP	MAX	MIN	TYP	MAX	
I_{CC}	Supply current	V_O = 0,	No load	25°C	1.35	1.6	2.2	1.35	1.6	2.2	mA
				Full range			2.2			2.2	
I_{OS}	Short-circuit output current	V_O = 0	V_{ID} = 1 V	25°C		−35			−35		mA
			V_{ID} = −1 V			45			45		

† Full range is 0°C to 70°C.

TLE2071C operating characteristics at specified free-air temperature, $V_{CC\pm}$ = ±5 V

PARAMETER		TEST CONDITIONS		T_A†	TLE2071C			TLE2071AC			UNIT
					MIN	TYP	MAX	MIN	TYP	MAX	
SR+	Positive slew rate	$V_{O(PP)}$ = ±2.3 V, A_{VD} = −1, C_L = 100 pF,	R_L = 2 kΩ, See Figure 1	25°C		35			35		V/µs
				Full range	23			23			
SR−	Negative slew rate			25°C		38			38		V/µs
				Full range	23			23			
t_s	Settling time	A_{VD} = −1, 2-V step, R_L = 1 kΩ, C_L = 100 pF	To 10 mV	25°C		0.25			0.25		µs
			To 1 mV			0.4			0.4		
V_n	Equivalent input noise voltage	R_S = 20 Ω, See Figure 3	f = 10 Hz	25°C		48	85		48	85	nV/√Hz
			f = 10 kHz			12	17		12	17	
$V_{N(PP)}$	Peak-to-peak equivalent input noise voltage		f = 10 Hz to 10 kHz	25°C		6			6		µV
			f = 0.1 Hz to 10 Hz			0.6			0.6		
I_n	Equivalent input noise current	V_{IC} = 0,	f = 10 kHz	25°C		2.8			2.8		fA/√Hz
THD + N	Total harmonic distortion plus noise	$V_{O(PP)}$ = 5 V, f = 1 kHz, R_S = 25 Ω	A_{VD} = 10, R_L = 2 kΩ,	25°C		0.013%			0.013%		
B_1	Unity-gain bandwidth	V_I = 10 mV, C_L = 25 pF,	R_L = 2 kΩ, See Figure 2	25°C		9.4			9.4		MHz
B_{OM}	Maximum output-swing bandwidth	$V_{O(PP)}$ = 4 V, R_L = 2 kΩ ,	A_{VD} = −1, C_L = 25 pF	25°C		2.8			2.8		MHz
ϕ_m	Phase margin at unity gain	V_I = 10 mV, C_L = 25 pF,	R_L = 2 kΩ, See Figure 2	25°C		56°			56°		

† Full range is 0°C to 70°C.

TLE2071C electrical characteristics at specified free-air temperature, $V_{CC\pm}$ = ±15 V (unless otherwise noted)

PARAMETER		TEST CONDITIONS		T_A†	TLE2071C MIN	TLE2071C TYP	TLE2071C MAX	TLE2071AC MIN	TLE2071AC TYP	TLE2071AC MAX	UNIT
V_{IO}	Input offset voltage	V_{IC} = 0, V_O = 0, R_S = 50 Ω		25°C		0.49	4		0.47	2	mV
				Full range			6			4	
α_{VIO}	Temperature coefficient of input offset voltage			Full range		3.2	29		3.2	29	μV/°C
I_{IO}	Input offset current	V_{IC} = 0, V_O = 0, See Figure 4		25°C		6	100		6	100	pA
				Full range			1.4			1.4	nA
I_{IB}	Input bias current			25°C		20	175		20	175	pA
				Full range			5			5	nA
V_{ICR}	Common-mode input voltage range	R_S = 50 Ω		25°C	15 to −11	15 to −11.9		15 to −11	15 to −11.9		V
				Full range	15 to −10.9			15 to −10.9			
V_{OM+}	Maximum positive peak output voltage swing	I_O = −200 μA		25°C	13.8	14.1		13.8	14.1		V
				Full range	13.7			13.7			
		I_O = −2 mA		25°C	13.5	13.9		13.5	13.9		
				Full range	13.4			13.4			
		I_O = −20 mA		25°C	11.5	12.3		11.5	12.3		
				Full range	11.5			11.5			
V_{OM-}	Maximum negative peak output voltage swing	I_O = 200 μA		25°C	−13.8	−14.2		−13.8	−14.2		V
				Full range	−13.7			−13.7			
		I_O = 2 mA		25°C	−13.5	−14		−13.5	−14		
				Full range	−13.4			−13.4			
		I_O = 20 mA		25°C	−11.5	−12.4		−11.5	−12.4		
				Full range	−11.5			−11.5			
A_{VD}	Large-signal differential voltage amplification	V_O = ±10 V	R_L = 600 Ω	25°C	80	96		80	96		dB
				Full range	79			79			
			R_L = 2 kΩ	25°C	90	109		90	109		
				Full range	89			89			
			R_L = 10 kΩ	25°C	95	118		95	118		
				Full range	94			94			
r_i	Input resistance	V_{IC} = 0		25°C		10^{12}			10^{12}		Ω
c_i	Input capacitance	V_{IC} = 0, See Figure 5	Common mode	25°C		7.5			7.5		pF
			Differential	25°C		2.5			2.5		
z_o	Open-loop output impedance	f = 1 MHz		25°C		80			80		Ω
CMRR	Common-mode rejection ratio	V_{IC} = V_{ICR}min, V_O = 0, R_S = 50 Ω		25°C	80	98		80	98		dB
				Full range	79			79			
k_{SVR}	Supply-voltage rejection ratio ($\Delta V_{CC\pm}/\Delta V_{IO}$)	$V_{CC\pm}$ = ±5 V to ±15 V, V_O = 0, R_S = 50 Ω		25°C	82	99		82	99		dB
				Full range	80			81			

† Full range is 0°C to 70°C.

TLE2071C electrical characteristics at specified free-air temperature, $V_{CC\pm}$ = ±15 V (unless otherwise noted) (continued)

PARAMETER		TEST CONDITIONS		T_A†	TLE2071C			TLE2071AC			UNIT
					MIN	TYP	MAX	MIN	TYP	MAX	
I_{CC}	Supply current	V_O = 0,	No load	25°C	1.35	1.7	2.2	1.35	1.7	2.2	mA
				Full range			2.2			2.2	
I_{OS}	Short-circuit output current	V_O = 0	V_{ID} = 1 V	25°C	−30	−45		−30	−45		mA
			V_{ID} = −1 V		30	48		30	48		

† Full range is 0°C to 70°C.

TLE2071C operating characteristics at specified free-air temperature, $V_{CC\pm}$ = ±15 V

PARAMETER		TEST CONDITIONS		T_A†	TLE2071C			TLE2071AC			UNIT
					MIN	TYP	MAX	MIN	TYP	MAX	
SR+	Positive slew rate	$V_{O(PP)}$ = 10 V, R_L = 2 kΩ, See Figure 1	A_{VD} = −1, C_L = 100 pF,	25°C	30	40		30	40		V/µs
				Full range	27			27			
SR−	Negative slew rate			25°C	30	45		30	45		V/µs
				Full range	27			27			
t_s	Settling time	A_{VD} = −1, 10-V step, R_L = 1 kΩ, C_L = 100 pF	To 10 mV	25°C		0.4			0.4		µs
			To 1 mV			1.5			1.5		
V_n	Equivalent input noise voltage	R_S = 20 Ω, See Figure 3	f = 10 Hz	25°C		48	85		48	85	nV/√Hz
			f = 10 kHz			12	17		12	17	
$V_{N(PP)}$	Peak-to-peak equivalent input noise voltage		f = 10 Hz to 10 kHz	25°C		6			6		µV
			f = 0.1 Hz to 10 Hz			0.6			0.6		
I_n	Equivalent input noise current	V_{IC} = 0,	f = 10 kHz	25°C		2.8			2.8		fA/√Hz
THD + N	Total harmonic distortion plus noise	$V_{O(PP)}$ = 20 V, f = 1 kHz, R_S = 25 Ω	A_{VD} = 10, R_L = 2 kΩ,	25°C		0.008%			0.008%		
B_1	Unity-gain bandwidth	V_I = 10 mV, C_L = 25 pF,	R_L = 2 kΩ, See Figure 2	25°C	8	10		8	10		MHz
B_{OM}	Maximum output-swing bandwidth	$V_{O(PP)}$ = 20 V, R_L = 2 kΩ,	A_{VD} = −1, C_L = 25 pF	25°C	478	637		478	637		kHz
ϕ_m	Phase margin at unity gain	V_I = 10 mV, C_L = 25 pF,	R_L = 2 kΩ, See Figure 2	25°C		57°			57°		

† Full range is 0°C to 70°C.

TLE2071I electrical characteristics at specified free-air temperature, $V_{CC\pm} = \pm 5$ V (unless otherwise noted)

PARAMETER		TEST CONDITIONS		T_A†	TLE2071I MIN	TLE2071I TYP	TLE2071I MAX	TLE2071AI MIN	TLE2071AI TYP	TLE2071AI MAX	UNIT
V_{IO}	Input offset voltage	$V_{IC} = 0$, $V_O = 0$, $R_S = 50\ \Omega$,		25°C		0.34	4		0.3	2	mV
				Full range			7.6			5.6	
α_{VIO}	Temperature coefficient of input offset voltage			Full range		3.2	29		3.2	29	μV/°C
I_{IO}	Input offset current	$V_{IC} = 0$, $V_O = 0$, See Figure 4		25°C		5	100		5	100	pA
				Full range			5			5	nA
I_{IB}	Input bias current			25°C		15	175		15	175	pA
				Full range			10			10	nA
V_{ICR}	Common-mode input voltage range	$R_S = 50\ \Omega$		25°C	5 to −1	5 to −1.9		5 to −1	5 to −1.9		V
				Full range	5 to −0.8			5 to −0.8			
V_{OM+}	Maximum positive peak output voltage swing	$I_O = -200\ \mu A$		25°C	3.8	4.1		3.8	4.1		V
				Full range	3.7			3.7			
		$I_O = -2$ mA		25°C	3.5	3.9		3.5	3.9		
				Full range	3.4			3.4			
		$I_O = -20$ mA		25°C	1.5	2.3		1.5	2.3		
				Full range	1.5			1.5			
V_{OM-}	Maximum negative peak output voltage swing	$I_O = 200\ \mu A$		25°C	−3.8	−4.2		−3.8	−4.2		V
				Full range	−3.7			−3.7			
		$I_O = 2$ mA		25°C	−3.5	−4.1		−3.5	−4.1		
				Full range	−3.4			−3.4			
		$I_O = 20$ mA		25°C	−1.5	−2.4		−1.5	−2.4		
				Full range	−1.5			−1.5			
A_{VD}	Large-signal differential voltage amplification	$V_O = \pm 2.3$ V	$R_L = 600\ \Omega$	25°C	80	91		80	91		dB
				Full range	79			79			
			$R_L = 2\ k\Omega$	25°C	90	100		90	100		
				Full range	89			89			
			$R_L = 10\ k\Omega$	25°C	95	106		95	106		
				Full range	94			94			
r_i	Input resistance	$V_{IC} = 0$		25°C		10^{12}			10^{12}		Ω
c_i	Input capacitance	$V_{IC} = 0$, See Figure 5	Common mode	25°C		11			11		pF
			Differential	25°C		2.5			2.5		
z_o	Open-loop output impedance	f = 1 MHz		25°C		80			80		Ω
CMRR	Common-mode rejection ratio	$V_{IC} = V_{ICR}$min, $V_O = 0$, $R_S = 50\ \Omega$		25°C	70	89		70	89		dB
				Full range	68			68			
k_{SVR}	Supply-voltage rejection ratio ($\Delta V_{CC\pm}/\Delta V_{IO}$)	$V_{CC\pm} = \pm 5$ V to ± 15 V, $V_O = 0$, $R_S = 50\ \Omega$		25°C	82	99		82	99		dB
				Full range	80			80			

† Full range is −40°C to 85°C.

TLE2071I electrical characteristics at specified free-air temperature, $V_{CC\pm} = \pm 5$ V (unless otherwise noted) (continued)

PARAMETER		TEST CONDITIONS		T_A†	TLE2071I			TLE2071AI			UNIT
					MIN	TYP	MAX	MIN	TYP	MAX	
I_{CC}	Supply current	$V_O = 0$,	No load	25°C	1.35	1.6	2.2	1.35	1.6	2.2	mA
				Full range			2.2			2.2	
I_{OS}	Short-circuit output current	$V_O = 0$	$V_{ID} = 1$ V	25°C		−35			−35		mA
			$V_{ID} = -1$ V			45			45		

† Full range is −40°C to 85°C.

TLE2071I operating characteristics at specified free-air temperature, $V_{CC\pm} = \pm 5$ V

PARAMETER		TEST CONDITIONS		T_A†	TLE2071I			TLE2071AI			UNIT
					MIN	TYP	MAX	MIN	TYP	MAX	
SR+	Positive slew rate	$V_{O(PP)} = \pm 2.3$ V, $A_{VD} = -1$, $C_L = 100$ pF,	$R_L = 2$ kΩ, See Figure 1	25°C		35			35		V/µs
				Full range	22			22			
SR−	Negative slew rate			25°C		38			38		V/µs
				Full range	22			22			
t_s	Settling time	$A_{VD} = -1$, 2-V step, $R_L = 1$ kΩ, $C_L = 100$ pF	To 10 mV	25°C		0.25			0.25		µs
			To 1 mV			0.4			0.4		
V_n	Equivalent input noise voltage	$R_S = 20$ Ω, See Figure 3	f = 10 Hz	25°C		48	85		48	85	nV/√Hz
			f = 10 kHz			12	17		12	17	
$V_{N(PP)}$	Peak-to-peak equivalent input noise voltage		f = 10 Hz to 10 kHz	25°C		6			6		µV
			f = 0.1 Hz to 10 Hz			0.6			0.6		
I_n	Equivalent input noise current	$V_{IC} = 0$,	f = 10 kHz	25°C		2.8			2.8		fA/√Hz
THD + N	Total harmonic distortion plus noise	$V_{O(PP)} = 5$ V, f = 1 kHz, $R_S = 25$ Ω	$A_{VD} = 10$, $R_L = 2$ kΩ,	25°C		0.013%			0.013%		
B_1	Unity-gain bandwidth	$V_I = 10$ mV, $C_L = 25$ pF,	$R_L = 2$ kΩ, See Figure 2	25°C		9.4			9.4		MHz
B_{OM}	Maximum output-swing bandwidth	$V_{O(PP)} = 4$ V, $R_L = 2$ kΩ ,	$A_{VD} = -1$, $C_L = 25$ pF	25°C		2.8			2.8		MHz
ϕ_m	Phase margin at unity gain	$V_I = 10$ mV, $C_L = 25$ pF,	$R_L = 2$ kΩ, See Figure 2	25°C		56°			56°		

† Full range is −40°C to 85°C.

TLE2071I electrical characteristics at specified free-air temperature, $V_{CC\pm}$ = ±15 V (unless otherwise noted)

PARAMETER		TEST CONDITIONS		T_A†	TLE2071I MIN	TLE2071I TYP	TLE2071I MAX	TLE2071AI MIN	TLE2071AI TYP	TLE2071AI MAX	UNIT
V_{IO}	Input offset voltage	V_{IC} = 0, V_O = 0, R_S = 50 Ω,		25°C		0.49	4		0.47	2	mV
				Full range			7.6			5.6	
α_{VIO}	Temperature coefficient of input offset voltage			Full range		3.2	29		3.2	29	μV/°C
I_{IO}	Input offset current	V_{IC} = 0, V_O = 0, See Figure 4		25°C		6	100		6	100	pA
				Full range			5			5	nA
I_{IB}	Input bias current			25°C		20	175		20	175	pA
				Full range			10			10	nA
V_{ICR}	Common-mode input voltage range	R_S = 50 Ω		25°C	15 to −11	15 to −11.9		15 to −11	15 to −11.9		V
				Full range	15 to −10.8			15 to −10.8			
V_{OM+}	Maximum positive peak output voltage swing	I_O = −200 μA		25°C	13.8	14.1		13.8	14.1		V
				Full range	13.7			13.7			
		I_O = −2 mA		25°C	13.5	13.9		13.5	13.9		
				Full range	13.4			13.4			
		I_O = −20 mA		25°C	11.5	12.3		11.5	12.3		
				Full range	11.5			11.5			
V_{OM-}	Maximum negative peak output voltage swing	I_O = 200 μA		25°C	−13.8	−14.2		−13.8	−14.2		V
				Full range	−13.7			−13.7			
		I_O = 2 mA		25°C	−13.5	−14		−13.5	−14		
				Full range	−13.4			−13.4			
		I_O = 20 mA		25°C	−11.5	−12.4		−11.5	−12.4		
				Full range	−11.5			−11.5			
A_{VD}	Large-signal differential voltage amplification	V_O = ± 10 V	R_L = 600 Ω	25°C	80	96		80	96		dB
				Full range	79			79			
			R_L = 2 kΩ	25°C	90	109		90	109		
				Full range	89			89			
			R_L = 10 kΩ	25°C	95	118		95	118		
				Full range	94			94			
r_i	Input resistance	V_{IC} = 0		25°C		10^{12}			10^{12}		Ω
c_i	Input capacitance	V_{IC} = 0, See Figure 5	Common mode	25°C		7.5			7.5		pF
			Differential	25°C		2.5			2.5		
z_o	Open-loop output impedance	f = 1 MHz		25°C		80			80		Ω
CMRR	Common-mode rejection ratio	V_{IC} = V_{ICR}min, V_O = 0, R_S = 50 Ω		25°C	80	98		80	98		dB
				Full range	79			79			
k_{SVR}	Supply-voltage rejection ratio ($\Delta V_{CC\pm}/\Delta V_{IO}$)	$V_{CC\pm}$ = ±5 V to ±15 V, V_O = 0, R_S = 50 Ω		25°C	82	99		82	99		dB
				Full range	80			80			

† Full range is −40°C to 85°C.

TLE2071I electrical characteristics at specified free-air temperature, $V_{CC\pm}$ = ±15 V (unless otherwise noted) (continued)

PARAMETER		TEST CONDITIONS		T_A†	TLE2071I			TLE2071AI			UNIT
					MIN	TYP	MAX	MIN	TYP	MAX	
I_{CC}	Supply current	V_O = 0,	No load	25°C	1.35	1.7	2.2	1.35	1.7	2.2	mA
				Full range			2.2			2.2	
I_{OS}	Short-circuit output current	V_O = 0	V_{ID} = 1 V	25°C	−30	−45		−30	−45		mA
			V_{ID} = −1 V		30	48		30	48		

† Full range is −40°C to 85°C.

TLE2071I operating characteristics at specified free-air temperature, $V_{CC\pm}$ = ±15 V

PARAMETER		TEST CONDITIONS		T_A†	TLE2071I			TLE2071AI			UNIT
					MIN	TYP	MAX	MIN	TYP	MAX	
SR+	Positive slew rate	$V_{O(PP)}$ = ±10 V, A_{VD} = −1, C_L = 100 pF,	R_L = 2 kΩ, See Figure 1	25°C	30	40		30	40		V/µs
				Full range	24			24			
SR−	Negative slew rate			25°C	30	45		30	45		V/µs
				Full range	24			24			
t_s	Settling time	A_{VD} = −1, 10-V step, R_L = 1 kΩ, C_L = 100 pF	To 10 mV	25°C		0.4			0.4		µs
			To 1 mV			1.5			1.5		
V_n	Equivalent input noise voltage	R_S = 20 Ω, See Figure 3	f = 10 Hz	25°C		48	85		48	85	nV/√Hz
			f = 10 kHz			12	17		12	17	
$V_{N(PP)}$	Peak-to-peak equivalent input noise voltage		f = 10 Hz to 10 kHz	25°C		6			6		µV
			f = 0.1 Hz to 10 Hz			0.6			0.6		
I_n	Equivalent input noise current	V_{IC} = 0,	f = 10 kHz	25°C		2.8			2.8		fA/√Hz
THD + N	Total harmonic distortion plus noise	$V_{O(PP)}$ = 20 V, f = 1 kHz, R_S = 25 Ω	A_{VD} = 10, R_L = 2 kΩ,	25°C		0.008%			0.008%		
B_1	Unity-gain bandwidth	V_I = 10 mV, C_L = 25 pF,	R_L = 2 kΩ, See Figure 2	25°C	8	10		8	10		MHz
B_{OM}	Maximum output-swing bandwidth	$V_{O(PP)}$ = 20 V, R_L = 2 kΩ,	A_{VD} = −1, C_L = 25 pF	25°C	478	637		478	637		kHz
ϕ_m	Phase margin at unity gain	V_I = 10 mV, C_L = 25 pF,	R_L = 2 kΩ, See Figure 2	25°C		57°			57°		

† Full range is −40°C to 85°C.

TLE2071M electrical characteristics at specified free-air temperature, $V_{CC\pm}$ = ±5 V (unless otherwise noted)

PARAMETER		TEST CONDITIONS		T_A†	TLE2071M MIN	TLE2071M TYP	TLE2071M MAX	TLE2071AM MIN	TLE2071AM TYP	TLE2071AM MAX	UNIT
V_{IO}	Input offset voltage	V_{IC} = 0, V_O = 0, R_S = 50 Ω,		25°C		0.34	4		0.3	2	mV
				Full range			9.2			7.2	
α_{VIO}	Temperature coefficient of input offset voltage			Full range		3.2	29‡		3.2	29‡	μV/°C
I_{IO}	Input offset current	V_{IC} = 0, V_O = 0, See Figure 4		25°C		5	100		5	100	pA
				Full range			20			20	nA
I_{IB}	Input bias current			25°C		15	175		15	175	pA
				Full range			60			60	nA
V_{ICR}	Common-mode input voltage range	R_S = 50 Ω		25°C	5 to −1	5 to −1.9		5 to −1	5 to −1.9		V
				Full range	5 to −0.8			5 to −0.8			
V_{OM+}	Maximum positive peak output voltage swing	I_O = −200 μA		25°C	3.8	4.1		3.8	4.1		V
				Full range	3.6			3.6			
		I_O = −2 mA		25°C	3.5	3.9		3.5	3.9		
				Full range	3.3			3.3			
		I_O = −20 mA		25°C	1.5	2.3		1.5	2.3		
				Full range	1.4			1.4			
V_{OM-}	Maximum negative peak output voltage swing	I_O = 200 μA		25°C	−3.8	−4.2		−3.8	−4.2		V
				Full range	−3.6			−3.6			
		I_O = 2 mA		25°C	−3.5	−4.1		−3.5	−4.1		
				Full range	−3.3			−3.3			
		I_O = 20 mA		25°C	−1.5	−2.4		−1.5	−2.4		
				Full range	−1.4			−1.4			
A_{VD}	Large-signal differential voltage amplification	V_O = ±2.3 V	R_L = 600 Ω	25°C	80	91		80	91		dB
				Full range	78			78			
			R_L = 2 kΩ	25°C	90	100		90	100		
				Full range	88			88			
			R_L = 10 kΩ	25°C	95	106		95	106		
				Full range	93			93			
r_i	Input resistance	V_{IC} = 0		25°C		10^{12}			10^{12}		Ω
c_i	Input capacitance	V_{IC} = 0, See Figure 5	Common mode	25°C		11			11		pF
			Differential	25°C		2.5			2.5		
z_o	Open-loop output impedance	f = 1 MHz		25°C		80			80		Ω
CMRR	Common-mode rejection ratio	V_{IC} = V_{ICR}min, V_O = 0, R_S = 50 Ω		25°C	70	89		70	89		dB
				Full range	68			68			
k_{SVR}	Supply-voltage rejection ratio ($\Delta V_{CC\pm}/\Delta V_{IO}$)	$V_{CC\pm}$ = ±5 V to ±15 V, V_O = 0, R_S = 50 Ω		25°C	82	99		82	99		dB
				Full range	80			80			

† Full range is −55°C to 125°C.
‡ *On products compliant to MIL-PRF-38535, Class B, this parameter is not production tested.

TLE2071M electrical characteristics at specified free-air temperature, $V_{CC\pm}$ = ±5 V (unless otherwise noted)

PARAMETER		TEST CONDITIONS		T_A†	TLE2071M			TLE2071AM			UNIT
					MIN	TYP	MAX	MIN	TYP	MAX	
I_{CC}	Supply current	V_O = 0,	No load	25°C	1.35	1.6	2.2	1.35	1.6	2.2	mA
				Full range			2.2			2.2	
I_{OS}	Short-circuit output current	V_O = 0	V_{ID} = 1 V	25°C		−35			−35		mA
			V_{ID} = −1 V			45			45		

† Full range is −55°C to 125°C.

TLE2071M operating characteristics at specified free-air temperature, $V_{CC\pm}$ = ±5 V

PARAMETER		TEST CONDITIONS		T_A†	TLE2071M			TLE2071AM			UNIT
					MIN	TYP	MAX	MIN	TYP	MAX	
SR+	Positive slew rate	$V_{O(PP)}$ = ±2.3 V, A_{VD} = −1, C_L = 100 pF,	R_L = 2 kΩ, See Figure 1	25°C		35			35		V/µs
				Full range	20‡			20‡			
SR−	Negative slew rate			25°C		38			38		V/µs
				Full range	20‡			20‡			
t_s	Settling time	A_{VD} = −1, 2-V step, R_L = 1 kΩ, C_L = 100 pF	To 10 mV	25°C		0.25			0.25		µs
			To 1 mV			0.4			0.4		
V_n	Equivalent input noise voltage	R_S = 20 Ω, See Figure 3	f = 10 Hz	25°C		48	85‡		48	85‡	nV/√Hz
			f = 10 kHz			12	17‡		12	17‡	
$V_{N(PP)}$	Peak-to-peak equivalent input noise voltage		f = 10 Hz to 10 kHz	25°C		6			6		µV
			f = 0.1 Hz to 10 Hz			0.6			0.6		
I_n	Equivalent input noise current	V_{IC} = 0,	f = 10 kHz	25°C		2.8			2.8		fA/√Hz
THD + N	Total harmonic distortion plus noise	$V_{O(PP)}$ = 5 V, f = 1 kHz, R_S = 25 Ω	A_{VD} = 10, R_L = 2 kΩ,	25°C		0.013%			0.013%		
B_1	Unity-gain bandwidth	V_I = 10 mV, C_L = 25 pF,	R_L = 2 kΩ, See Figure 2	25°C		9.4			9.4		MHz
B_{OM}	Maximum output-swing bandwidth	$V_{O(PP)}$ = 4 V, R_L = 2 kΩ ,	A_{VD} = −1, C_L = 25 pF	25°C		2.8			2.8		MHz
ϕ_m	Phase margin at unity gain	V_I = 10 mV, C_L = 25 pF,	R_L = 2 kΩ, See Figure 2	25°C		56°			56°		

† Full range is −55°C to 125°C.
‡ *On products compliant to MIL-PRF-38535, Class B, this parameter is not production tested.

TLE2071M electrical characteristics at specified free-air temperature, $V_{CC\pm}$ = ±15 V (unless otherwise noted)

PARAMETER		TEST CONDITIONS		T_A†	TLE2071M MIN	TLE2071M TYP	TLE2071M MAX	TLE2071AM MIN	TLE2071AM TYP	TLE2071AM MAX	UNIT
V_{IO}	Input offset voltage	V_{IC} = 0, V_O = 0, R_S = 50 Ω		25°C		0.49	4		0.47	2	mV
				Full range			9.2			7.2	
α_{VIO}	Temperature coefficient of input offset voltage			Full range		3.2	29*		3.2	29*	μV/°C
I_{IO}	Input offset current	V_{IC} = 0, V_O = 0, See Figure 4		25°C		6	100		6	100	pA
				Full range			20			20	nA
I_{IB}	Input bias current			25°C		20	175		20	175	pA
				Full range			60			60	nA
V_{ICR}	Common-mode input voltage range	R_S = 50 Ω		25°C	15 to −11	15 to −11.9		15 to −11	15 to −11.9		V
				Full range	15 to −10.9			15 to −10.9			
V_{OM+}	Maximum positive peak output voltage swing	I_O = −200 μA		25°C	13.8	14.1		13.8	14.1		V
				Full range	13.6			13.6			
		I_O = −2 mA		25°C	13.5	13.9		13.5	13.9		
				Full range	13.3			13.3			
		I_O = −20 mA		25°C	11.5	12.3		11.5	12.3		
				Full range	11.4			11.4			
V_{OM-}	Maximum negative peak output voltage swing	I_O = 200 μA		25°C	−13.8	−14.2		−13.8	−14.2		V
				Full range	−13.6			−13.6			
		I_O = 2 mA		25°C	−13.5	−14		−13.5	−14		
				Full range	−13.3			−13.3			
		I_O = 20 mA		25°C	−11.5	−12.4		−11.5	−12.4		
				Full range	−11.4			−11.4			
A_{VD}	Large-signal differential voltage amplification	V_O = ±10 V	R_L = 600 Ω	25°C	80	96		80	96		dB
				Full range	78			78			
			R_L = 2 kΩ	25°C	90	109		90	109		
				Full range	88			88			
			R_L = 10 kΩ	25°C	95	118		95	118		
				Full range	93			93			
r_i	Input resistance	V_{IC} = 0		25°C		10^{12}			10^{12}		Ω
c_i	Input capacitance	V_{IC} = 0, See Figure 5	Common mode	25°C		7.5			7.5		pF
			Differential	25°C		2.5			2.5		
z_o	Open-loop output impedance	f = 1 MHz		25°C		80			80		Ω
CMRR	Common-mode rejection ratio	V_{IC} = V_{ICR}min, V_O = 0, R_S = 50 Ω		25°C	80	98		80	98		dB
				Full range	78			78			
k_{SVR}	Supply-voltage rejection ratio ($\Delta V_{CC\pm}/\Delta V_{IO}$)	$V_{CC\pm}$ = ±5 V to ±15 V, V_O = 0, R_S = 50 Ω		25°C	82	99		82	99		dB
				Full range	80			80			

*On products compliant to MIL-PRF-38535, Class B, this parameter is not production tested.
† Full range is −55°C to 125°C.

TLE2071M electrical characteristics at specified free-air temperature, $V_{CC\pm}$ = ±15 V (unless otherwise noted) (continued)

PARAMETER		TEST CONDITIONS		T_A†	TLE2071M			TLE2071AM			UNIT
					MIN	TYP	MAX	MIN	TYP	MAX	
I_{CC}	Supply current	V_O = 0,	No load	25°C	1.35	1.7	2.2	1.35	1.7	2.2	mA
				Full range			2.2			2.2	
I_{OS}	Short-circuit output current	V_O = 0	V_{ID} = 1 V	25°C	−30	−45		−30	−45		mA
			V_{ID} = −1 V		30	48		30	48		

† Full range is −55°C to 125°C.

TLE2071M operating characteristics at specified free-air temperature, $V_{CC\pm}$ = ±15 V

PARAMETER		TEST CONDITIONS		T_A†	TLE2071M			TLE2071AM			UNIT
					MIN	TYP	MAX	MIN	TYP	MAX	
SR+	Positive slew rate	$V_{O(PP)}$ = 10 V, R_L = 2 kΩ, See Figure 1	A_{VD} = −1, C_L = 100 pF,	25°C	30	40		30	40		V/µs
				Full range	22			22			
SR−	Negative slew rate			25°C	30	45		30	45		V/µs
				Full range	22			22			
t_s	Settling time	A_{VD} = −1, 10-V step, R_L = 1 kΩ, C_L = 100 pF	To 10 mV	25°C		0.4			0.4		µs
			To 1 mV			1.5			1.5		
V_n	Equivalent input noise voltage	R_S = 20 Ω, See Figure 3	f = 10 Hz	25°C		48	85*		48	85*	nV/√Hz
			f = 10 kHz			12	17*		12	17*	
$V_{N(PP)}$	Peak-to-peak equivalent input noise voltage		f = 10 Hz to 10 kHz	25°C		6			6		µV
			f = 0.1 Hz to 10 Hz			0.6			0.6		
I_n	Equivalent input noise current	V_{IC} = 0,	f = 10 kHz	25°C		2.8			2.8		fA/√Hz
THD + N	Total harmonic distortion plus noise	$V_{O(PP)}$ = 20 V, f = 1 kHz, R_S = 25 Ω	A_{VD} = 10, R_L = 2 kΩ,	25°C		0.008%			0.008%		
B_1	Unity-gain bandwidth	V_I = 10 mV, C_L = 25 pF,	R_L = 2 kΩ, See Figure 2	25°C	8*	10		8*	10		MHz
B_{OM}	Maximum output-swing bandwidth	$V_{O(PP)}$ = 20 V, R_L = 2 kΩ,	A_{VD} = −1, C_L = 25 pF	25°C	478*	637		478*	637		kHz
ϕ_m	Phase margin at unity gain	V_I = 10 mV, C_L = 25 pF,	R_L = 2 kΩ, See Figure 2	25°C		57°			57°		

*On products compliant to MIL-PRF-38535, Class B, this parameter is not production tested.
† Full range is −55°C to 125°C.

TLE2071Y electrical characteristics at $V_{CC\pm} = \pm15$ V, $T_A = 25°C$

PARAMETER		TEST CONDITIONS		TLE2071Y MIN	TLE2071Y TYP	TLE2071Y MAX	UNIT
V_{IO}	Input offset voltage	$V_{IC} = 0$, $V_O = 0$, $R_S = 50\ \Omega$			0.49	4	mV
I_{IO}	Input offset current	$V_{IC} = 0$, $V_O = 0$, See Figure 4			6	100	pA
I_{IB}	Input bias current				20	175	pA
V_{ICR}	Common-mode input voltage range	$R_S = 50\ \Omega$		15 to −11	15 to 11.9		V
V_{OM+}	Maximum positive peak output voltage swing	$I_O = -200\ \mu A$		13.8	14.1		V
		$I_O = -2$ mA		13.5	13.9		
		$I_O = -20$ mA		11.5	12.3		
V_{OM-}	Maximum negative peak output voltage swing	$I_O = 200\ \mu A$		−13.8	−14.2		V
		$I_O = 2$ mA		−13.5	−14		
		$I_O = 20$ mA		−11.5	−12.4		
A_{VD}	Large-signal differential voltage amplification	$V_O = \pm10$ V	$R_L = 600\ \Omega$	80	96		dB
			$R_L = 2\ k\Omega$	90	109		
			$R_L = 10\ k\Omega$	95	118		
r_i	Input resistance	$V_{IC} = 0$			10^{12}		Ω
c_i	Input capacitance	$V_O = 0$, See Figure 5	Common mode		7.5		pF
			Differential		2.5		
z_o	Open-loop output impedance	f = 1 MHz			80		Ω
CMRR	Common-mode rejection ratio	$V_{IC} = V_{ICR}$min, $R_S = 50\ \Omega$	$V_O = 0$,	80	98		dB
k_{SVR}	Supply-voltage rejection ratio ($\Delta V_{CC\pm}/\Delta V_{IO}$)	$V_{CC\pm} = \pm5$ V to ±15 V, $R_S = 50\ \Omega$	$V_O = 0$,	82	99		dB
I_{CC}	Supply current	$V_O = 0$,	No load	1.35	1.7	2.2	mA
I_{OS}	Short-circuit output current	$V_O = 0$	$V_{ID} = 1$ V	−30	−45		mA
			$V_{ID} = -1$ V	30	48		

TLE2072C electrical characteristics at specified free-air temperature, $V_{CC\pm}$ = ±5 V (unless otherwise noted)

PARAMETER		TEST CONDITIONS		T_A†	TLE2072C MIN	TLE2072C TYP	TLE2072C MAX	TLE2072AC MIN	TLE2072AC TYP	TLE2072AC MAX	UNIT
V_{IO}	Input offset voltage	V_{IC} = 0, V_O = 0, R_S = 50 Ω		25°C		0.9	6		0.65	3.5	mV
				Full range			7.8			5.3	
α_{VIO}	Temperature coefficient of input offset voltage			Full range		2.3	25		2.3	25	μV/°C
I_{IO}	Input offset current	V_{IC} = 0, V_O = 0, See Figure 4		25°C		5	100		5	100	pA
				Full range			1.4			1.4	nA
I_{IB}	Input bias current			25°C		15	175		15	175	pA
				Full range			5			5	nA
V_{ICR}	Common-mode input voltage range	R_S = 50 Ω		25°C	5 to −1	5 to −1.9		5 to −1	5 to −1.9		V
				Full range	5 to −0.9			5 to −0.9			
V_{OM+}	Maximum positive peak output voltage swing	I_O = −200 μA		25°C	3.8	4.1		3.8	4.1		V
				Full range	3.7			3.7			
		I_O = −2 mA		25°C	3.5	3.9		3.5	3.9		
				Full range	3.4			3.4			
		I_O = −20 mA		25°C	1.5	2.3		1.5	2.3		
				Full range	1.5			1.5			
V_{OM-}	Maximum negative peak output voltage swing	I_O = 200 μA		25°C	−3.8	−4.2		−3.8	−4.2		V
				Full range	−3.7			−3.7			
		I_O = 2 mA		25°C	−3.5	−4.1		−3.5	−4.1		
				Full range	−3.4			−3.4			
		I_O = 20 mA		25°C	−1.5	−2.4		−1.5	−2.4		
				Full range	−1.5			−1.5			
A_{VD}	Large-signal differential voltage amplification	V_O = ±2.3 V	R_L = 600 Ω	25°C	80	91		80	91		dB
				Full range	79			79			
			R_L = 2 kΩ	25°C	90	100		90	100		
				Full range	89			89			
			R_L = 10 kΩ	25°C	95	106		95	106		
				Full range	94			94			
r_i	Input resistance	V_{IC} = 0		25°C		10^{12}			10^{12}		Ω
c_i	Input capacitance	V_{IC} = 0, See Figure 5	Common mode	25°C		11			11		pF
			Differential	25°C		2.5			2.5		
z_o	Open-loop output impedance	f = 1 MHz		25°C		80			80		Ω
CMRR	Common-mode rejection ratio	V_{IC} = V_{ICR}min, V_O = 0, R_S = 50 Ω		25°C	70	89		70	89		dB
				Full range	68			68			
k_{SVR}	Supply-voltage rejection ratio($\Delta V_{CC\pm}/\Delta V_{IO}$)	$V_{CC\pm}$ = ±5 V to ±15 V, V_O = 0, R_S = 50 Ω		25°C	82	99		82	99		dB
				Full range	80			80			

† Full range is 0°C to 70°C.

TLE2072C electrical characteristics at specified free-air temperature, $V_{CC\pm}$ = ±5 V (unless otherwise noted) (continued)

PARAMETER		TEST CONDITIONS		T_A	TLE2072C			TLE2072AC			UNIT
					MIN	TYP	MAX	MIN	TYP	MAX	
I_{CC}	Supply current (both channels)	V_O = 0,	No load	25°C	2.7	2.9	3.9	2.7	2.9	3.9	mA
				Full range			3.9			3.9	
a_x	Crosstalk attenuation	V_{IC} = 0,	R_L = 2 kΩ	25°C		120			120		dB
I_{OS}	Short-circuit output current	V_O = 0	V_{ID} = 1 V	25°C		–35			–35		mA
			V_{ID} = –1 V			45			45		

TLE2072C operating characteristics at specified free-air temperature, $V_{CC\pm}$ = ±5 V

PARAMETER		TEST CONDITIONS		T_A†	TLE2072C			TLE2072AC			UNIT
					MIN	TYP	MAX	MIN	TYP	MAX	
SR+	Positive slew rate	$V_{O(PP)}$ = ±2.3 V, A_{VD} = –1, C_L = 100 pF,	R_L = 2 kΩ, See Figure 1	25°C		35			35		V/µs
				Full range	22			22			
SR–	Negative slew rate			25°C		38			38		V/µs
				Full range	22			22			
t_s	Settling time	A_{VD} = –1, 2-V step, R_L = 1 kΩ, C_L = 100 pF	To 10 mV	25°C		0.25			0.25		µs
			To 1 mV			0.4			0.4		
V_n	Equivalent input noise voltage	R_S = 20 Ω, See Figure 3	f = 10 Hz	25°C		48	85		48	85	nV/√Hz
			f = 10 kHz			12	17		12	17	
$V_{N(PP)}$	Peak-to-peak equivalent input noise voltage		f = 10 Hz to 10 kHz	25°C		6			6		µV
			f = 0.1 Hz to 10 Hz			0.6			0.6		
I_n	Equivalent input noise current	V_{IC} = 0,	f = 10 kHz	25°C		2.8			2.8		fA/√Hz
THD + N	Total harmonic distortion plus noise	$V_{O(PP)}$ = 5 V, f = 1 kHz, R_S = 25 Ω	A_{VD} = 10, R_L = 2 kΩ,	25°C		0.013%			0.013%		
B_1	Unity-gain bandwidth	V_I = 10 mV, C_L = 25 pF,	R_L = 2 kΩ, See Figure 2	25°C		9.4			9.4		MHz
B_{OM}	Maximum output-swing bandwidth	$V_{O(PP)}$ = 4 V, R_L = 2 kΩ ,	A_{VD} = –1, C_L = 25 pF	25°C		2.8			2.8		MHz
ϕ_m	Phase margin at unity gain	V_I = 10 mV, C_L = 25 pF,	R_L = 2 kΩ, See Figure 2	25°C		56°			56°		

† Full range is 0°C to 70°C.

TLE2072C electrical characteristics at specified free-air temperature, $V_{CC\pm}$ = ±15 V (unless otherwise noted)

PARAMETER		TEST CONDITIONS		T_A†	TLE2072C MIN	TLE2072C TYP	TLE2072C MAX	TLE2072AC MIN	TLE2072AC TYP	TLE2072AC MAX	UNIT
V_{IO}	Input offset voltage	V_{IC} = 0, V_O = 0, R_S = 50 Ω		25°C		1.1	6		0.7	3.5	mV
				Full range			7.8			5.3	
α_{VIO}	Temperature coefficient of input offset voltage			Full range		2.4	25		2.4	25	µV/°C
I_{IO}	Input offset current	V_{IC} = 0, V_O = 0, See Figure 4		25°C		6	100		6	100	pA
				Full range			1.4			1.4	nA
I_{IB}	Input bias current			25°C		20	175		20	175	pA
				Full range			5			5	nA
V_{ICR}	Common-mode input voltage range	R_S = 50 Ω		25°C	15 to −11	15 to −11.9		15 to −11	15 to −11.9		V
				Full range	15 to −10.9			15 to −10.9			
V_{OM+}	Maximum positive peak output voltage swing	I_O = −200 µA		25°C	13.8	14.1		13.8	14.1		V
				Full range	13.6			13.6			
		I_O = −2 mA		25°C	13.5	13.9		13.5	13.9		
				Full range	13.4			13.4			
		I_O = −20 mA		25°C	11.5	12.3		11.5	12.3		
				Full range	11.5			11.5			
V_{OM-}	Maximum negative peak output voltage swing	I_O = 200 µA		25°C	−13.8	−14.2		−13.8	−14.2		V
				Full range	−13.7			−13.7			
		I_O = 2 mA		25°C	−13.5	−14		−13.5	−14		
				Full range	−13.4			−13.4			
		I_O = 20 mA		25°C	−11.5	−12.4		−11.5	−12.4		
				Full range	−11.5			−11.5			
A_{VD}	Large-signal differential voltage amplification	V_O = ±10 V	R_L = 600 Ω	25°C	80	96		80	96		dB
				Full range	79			79			
			R_L = 2 kΩ	25°C	90	109		90	109		
				Full range	89			89			
			R_L = 10 kΩ	25°C	95	118		95	118		
				Full range	94			94			
r_i	Input resistance	V_{IC} = 0		25°C		10^{12}			10^{12}		Ω
c_i	Input capacitance	V_{IC} = 0, See Figure 5	Common mode	25°C		7.5			7.5		pF
			Differential	25°C		2.5			2.5		
z_o	Open-loop output impedance	f = 1 MHz		25°C		80			80		Ω
CMRR	Common-mode rejection ratio	V_{IC} = V_{ICR}min, V_O = 0, R_S = 50 Ω		25°C	80	98		80	98		dB
				Full range	79			79			
k_{SVR}	Supply-voltage rejection ratio ($\Delta V_{CC\pm}/\Delta V_{IO}$)	$V_{CC\pm}$ = ±5 V to ±15 V, V_O = 0, R_S = 50 Ω		25°C	82	99		82	99		dB
				Full range	81			81			

† Full range is 0°C to 70°C.

TLE2072C electrical characteristics at specified free-air temperature, $V_{CC\pm}$ = ±15 V (unless otherwise noted) (continued)

PARAMETER		TEST CONDITIONS		T_A	TLE2072C			TLE2072AC			UNIT
					MIN	TYP	MAX	MIN	TYP	MAX	
I_{CC}	Supply current (both channels)	V_O = 0,	No load	25°C	2.7	3.1	3.9	2.7	3.1	3.9	mA
				Full range			3.9			3.9	
a_x	Crosstalk attenuation	V_{IC} = 0,	R_L = 2 kΩ	25°C		120			120		dB
I_{OS}	Short-circuit output current	V_O = 0	V_{ID} = 1 V	25°C	−30	−45		−30	−45		mA
			V_{ID} = −1 V		30	48		30	48		

TLE2072C operating characteristics at specified free-air temperature, $V_{CC\pm}$ = ±15 V

PARAMETER		TEST CONDITIONS		T_A†	TLE2072C			TLE2072AC			UNIT
					MIN	TYP	MAX	MIN	TYP	MAX	
SR+	Positive slew rate	$V_{O(PP)}$ = 10 V, A_{VD} = −1, C_L = 100 pF,	R_L = 2 kΩ, See Figure 1	25°C	28	40		28	40		V/µs
				Full range	25			25			
SR−	Negative slew rate			25°C	30	45		30	45		V/µs
				Full range	25			25			
t_s	Settling time	A_{VD} = −1, 10-V step, R_L = 1 kΩ, C_L = 100 pF	To 10 mV	25°C		0.4			0.4		µs
			To 1 mV			1.5			1.5		
V_n	Equivalent input noise voltage	R_S = 20 Ω, See Figure 3	f = 10 Hz	25°C		48	85		48	85	nV/√Hz
			f = 10 kHz			12	17		12	17	
$V_{N(PP)}$	Peak-to-peak equivalent input noise voltage		f = 10 Hz to 10 kHz	25°C		6			6		µV
			f = 0.1 Hz to 10 Hz			0.6			0.6		
I_n	Equivalent input noise current	V_{IC} = 0,	f = 10 kHz	25°C		2.8			2.8		fA/√Hz
THD + N	Total harmonic distortion plus noise	$V_{O(PP)}$ = 20 V, f = 1 kHz, R_S = 25 Ω	A_{VD} = 10, R_L = 2 kΩ,	25°C		0.008%			0.008%		
B_1	Unity-gain bandwidth	V_I = 10 mV, C_L = 25 pF,	R_L = 2 kΩ, See Figure 2	25°C	8	10		8	10		MHz
B_{OM}	Maximum output-swing bandwidth	$V_{O(PP)}$ = 20 V, R_L = 2 kΩ,	A_{VD} = −1, C_L = 25 pF	25°C	478	637		478	637		kHz
ϕ_m	Phase margin at unity gain	V_I = 10 mV, C_L = 25 pF,	R_L = 2 kΩ, See Figure 2	25°C		57°			57°		

† Full range is 0°C to 70°C.

TLE2072I electrical characteristics at specified free-air temperature, $V_{CC\pm} = \pm 5$ V (unless otherwise noted)

PARAMETER		TEST CONDITIONS		T_A†	TLE2072I MIN	TLE2072I TYP	TLE2072I MAX	TLE2072AI MIN	TLE2072AI TYP	TLE2072AI MAX	UNIT
V_{IO}	Input offset voltage	$V_{IC} = 0$, $V_O = 0$, $R_S = 50\ \Omega$,		25°C		0.9	6		0.65	3.5	mV
				Full range			9.1			6.4	
α_{VIO}	Temperature coefficient of input offset voltage			Full range		2.4	25		2.4	25	μV/°C
I_{IO}	Input offset current	$V_{IC} = 0$, $V_O = 0$, See Figure 4		25°C		5	100		5	100	pA
				Full range			5			5	nA
I_{IB}	Input bias current			25°C		15	175		15	175	pA
				Full range			10			10	nA
V_{ICR}	Common-mode input voltage range	$R_S = 50\ \Omega$		25°C	5 to −1	5 to −1.9		5 to −1	5 to −1.9		V
				Full range	5 to −0.8			5 to −0.8			
V_{OM+}	Maximum positive peak output voltage swing	$I_O = -200\ \mu A$		25°C	3.8	4.1		3.8	4.1		V
				Full range	3.7			3.7			
		$I_O = -2$ mA		25°C	3.5	3.9		3.5	3.9		
				Full range	3.4			3.4			
		$I_O = -20$ mA		25°C	1.5	2.3		1.5	2.3		
				Full range	1.5			1.5			
V_{OM-}	Maximum negative peak output voltage swing	$I_O = 200\ \mu A$		25°C	−3.8	−4.2		−3.8	−4.2		V
				Full range	−3.7			−3.7			
		$I_O = 2$ mA		25°C	−3.5	−4.1		−3.5	−4.1		
				Full range	−3.4			−3.4			
		$I_O = 20$ mA		25°C	−1.5	−2.4		−1.5	−2.4		
				Full range	−1.5			−1.5			
A_{VD}	Large-signal differential voltage amplification	$V_O = \pm 2.3$ V	$R_L = 600\ \Omega$	25°C	80	91		80	91		dB
				Full range	79			79			
			$R_L = 2\ k\Omega$	25°C	90	100		90	100		
				Full range	89			89			
			$R_L = 10\ k\Omega$	25°C	95	106		95	106		
				Full range	94			94			
r_i	Input resistance	$V_{IC} = 0$		25°C		10^{12}			10^{12}		Ω
c_i	Input capacitance	$V_{IC} = 0$, See Figure 5	Common mode	25°C		11			11		pF
			Differential	25°C		2.5			2.5		
z_o	Open-loop output impedance	f = 1 MHz		25°C		80			80		Ω
CMRR	Common-mode rejection ratio	$V_{IC} = V_{ICR}$min, $V_O = 0$, $R_S = 50\ \Omega$		25°C	70	89		70	89		dB
				Full range	68			68			
k_{SVR}	Supply-voltage rejection ratio ($\Delta V_{CC\pm}/\Delta V_{IO}$)	$V_{CC\pm} = \pm 5$ V to ± 15 V, $V_O = 0$, $R_S = 50\ \Omega$		25°C	82	99		82	99		dB
				Full range	80			80			

† Full range is −40°C to 85°C.

TLE2072I electrical characteristics at specified free-air temperature, $V_{CC\pm} = \pm 5$ V (unless otherwise noted) (continued)

PARAMETER		TEST CONDITIONS		T_A	TLE2072I			TLE2072AI			UNIT
					MIN	TYP	MAX	MIN	TYP	MAX	
I_{CC}	Supply current (both channels)	$V_O = 0$,	No load	25°C	2.7	2.9	3.9	2.7	2.9	3.9	mA
				Full range			3.9			3.9	
a_x	Crosstalk attenuation	$V_{IC} = 0$,	$R_L = 2$ kΩ	25°C		120			120		dB
I_{OS}	Short-circuit output current	$V_O = 0$	$V_{ID} = 1$ V	25°C		−35			−35		mA
			$V_{ID} = -1$ V			45			45		

TLE2072I operating characteristics at specified free-air temperature, $V_{CC\pm} = \pm 5$ V

PARAMETER		TEST CONDITIONS		T_A†	TLE2072I			TLE2072AI			UNIT
					MIN	TYP	MAX	MIN	TYP	MAX	
SR+	Positive slew rate	$V_{O(PP)} = \pm 2.3$ V, $A_{VD} = -1$, $C_L = 100$ pF,	$R_L = 2$ kΩ, See Figure 1	25°C		35			35		V/µs
				Full range	20			20			
SR−	Negative slew rate			25°C		38			38		V/µs
				Full range	20			20			
t_s	Settling time	$A_{VD} = -1$, 2-V step, $R_L = 1$ kΩ, $C_L = 100$ pF	To 10 mV	25°C		0.25			0.25		µs
			To 1 mV			0.4			0.4		
V_n	Equivalent input noise voltage	$R_S = 20$ Ω, See Figure 3	f = 10 Hz	25°C		48	85		48	85	nV/√Hz
			f = 10 kHz			12	17		12	17	
$V_{N(PP)}$	Peak-to-peak equivalent input noise voltage		f = 10 Hz to 10 kHz	25°C		6			6		µV
			f = 0.1 Hz to 10 Hz			0.6			0.6		
I_n	Equivalent input noise current	$V_{IC} = 0$,	f = 10 kHz	25°C		2.8			2.8		fA/√Hz
THD + N	Total harmonic distortion plus noise	$V_{O(PP)} = 5$ V, f = 1 kHz, $R_S = 25$ Ω	$A_{VD} = 10$, $R_L = 2$ kΩ,	25°C		0.013%			0.013%		
B_1	Unity-gain bandwidth	$V_I = 10$ mV, $C_L = 25$ pF,	$R_L = 2$ kΩ, See Figure 2	25°C		9.4			9.4		MHz
B_{OM}	Maximum output-swing bandwidth	$V_{O(PP)} = 4$ V, $R_L = 2$ kΩ ,	$A_{VD} = -1$, $C_L = 25$ pF	25°C		2.8			2.8		MHz
ϕ_m	Phase margin at unity gain	$V_I = 10$ mV, $C_L = 25$ pF,	$R_L = 2$ kΩ, See Figure 2	25°C		56°			56°		

† Full range is 40°C to 85°C.

TLE2072I electrical characteristics at specified free-air temperature, $V_{CC\pm}$ = ±15 V (unless otherwise noted)

PARAMETER		TEST CONDITIONS		T_A†	TLE2072I MIN	TLE2072I TYP	TLE2072I MAX	TLE2072AI MIN	TLE2072AI TYP	TLE2072AI MAX	UNIT
V_{IO}	Input offset voltage	V_{IC} = 0, V_O = 0, R_S = 50 Ω,		25°C		1.1	6		0.7	3.5	mV
				Full range			9.1			6.4	
α_{VIO}	Temperature coefficient of input offset voltage			Full range		2.4	25		2.4	25	μV/°C
I_{IO}	Input offset current	V_{IC} = 0, V_O = 0, See Figure 4		25°C		6	100		6	100	pA
				Full range			5			5	nA
I_{IB}	Input bias current			25°C		20	175		20	175	pA
				Full range			10			10	nA
V_{ICR}	Common-mode input voltage range	R_S = 50 Ω		25°C	15 to −11	15 to −11.9		15 to −11	15 to −11.9		V
				Full range	15 to −10.8			15 to −10.8			
V_{OM+}	Maximum positive peak output voltage swing	I_O = −200 μA		25°C	13.8	14.1		13.8	14.1		V
				Full range	13.7			13.7			
		I_O = −2 mA		25°C	13.5	13.9		13.5	13.9		
				Full range	13.4			13.4			
		I_O = −20 mA		25°C	11.5	12.3		11.5	12.3		
				Full range	11.5			11.5			
V_{OM-}	Maximum negative peak output voltage swing	I_O = 200 μA		25°C	−13.8	−14.2		−13.8	−14.2		V
				Full range	−13.7			−13.7			
		I_O = 2 mA		25°C	−13.5	−14		−13.5	−14		
				Full range	−13.4			−13.4			
		I_O = 20 mA		25°C	−11.5	−12.4		−11.5	−12.4		
				Full range	−11.5			−11.5			
A_{VD}	Large-signal differential voltage amplification	V_O = ±10 V	R_L = 600 Ω	25°C	80	96		80	96		dB
				Full range	79			79			
			R_L = 2 kΩ	25°C	90	109		90	109		
				Full range	89			89			
			R_L = 10 kΩ	25°C	95	118		95	118		
				Full range	94			94			
r_i	Input resistance	V_{IC} = 0		25°C		10^{12}			10^{12}		Ω
c_i	Input capacitance	V_{IC} = 0, See Figure 5	Common mode	25°C		7.5			7.5		pF
			Differential	25°C		2.5			2.5		
z_o	Open-loop output impedance	f = 1 MHz		25°C		80			80		Ω
CMRR	Common-mode rejection ratio	V_{IC} = V_{ICR}min, V_O = 0, R_S = 50 Ω		25°C	80	98		80	98		dB
				Full range	79			79			
k_{SVR}	Supply-voltage rejection ratio ($\Delta V_{CC\pm}/\Delta V_{IO}$)	$V_{CC\pm}$ = ±5 V to ±15 V, V_O = 0, R_S = 50 Ω		25°C	82	99		82	99		dB
				Full range	80			80			

† Full range is −40°C to 85°C.

TLE2072I electrical characteristics at specified free-air temperature, $V_{CC\pm}$ = ±15 V (unless otherwise noted) (continued)

PARAMETER		TEST CONDITIONS		T_A	TLE2072I			TLE2072AI			UNIT
					MIN	TYP	MAX	MIN	TYP	MAX	
I_{CC}	Supply current (both channels)	V_O = 0,	No load	25°C	2.7	3.1	3.9	2.7	3.1	3.9	mA
				Full range			3.9			3.9	
a_x	Crosstalk attenuation	V_{IC} = 0,	R_L = 2 kΩ	25°C		120			120		dB
I_{OS}	Short-circuit output current	V_O = 0	V_{ID} = 1 V	25°C	–30	–45		–30	–45		mA
			V_{ID} = –1 V		30	48		30	48		

TLE2072I operating characteristics at specified free-air temperature, $V_{CC\pm}$ = ±15 V

PARAMETER		TEST CONDITIONS		T_A†	TLE2072I			TLE2072AI			UNIT
					MIN	TYP	MAX	MIN	TYP	MAX	
SR+	Positive slew rate	$V_{O(PP)}$ = ±10 V, A_{VD} = –1, C_L = 100 pF,	R_L = 2 kΩ, See Figure 1	25°C	28	40		28	40		V/µs
				Full range	22			22			
SR–	Negative slew rate			25°C	30	45		30	45		V/µs
				Full range	22			22			
t_s	Settling time	A_{VD} = –1, 10-V step, R_L = 1 kΩ, C_L = 100 pF	To 10 mV	25°C		0.4			0.4		µs
			To 1 mV			1.5			1.5		
V_n	Equivalent input noise voltage	R_S = 20 Ω, See Figure 3	f = 10 Hz	25°C		48	85		48	85	nV/√Hz
			f = 10 kHz			12	17		12	17	
$V_{N(PP)}$	Peak-to-peak equivalent input noise voltage		f = 0 Hz to 10 kHz	25°C		6			6		µV
			f = 0.1 Hz to 10 Hz			0.6			0.6		
I_n	Equivalent input noise current	V_{IC} = 0,	f = 10 kHz	25°C		2.8			2.8		fA/√Hz
THD + N	Total harmonic distortion plus noise	$V_{O(PP)}$ = 20 V, f = 1 kHz, R_S = 25 Ω	A_{VD} = 10, R_L = 2 kΩ,	25°C		0.008%			0.008%		
B_1	Unity-gain bandwidth	V_I = 10 mV, C_L = 25 pF,	R_L = 2 kΩ, See Figure 2	25°C	8	10		8	10		MHz
B_{OM}	Maximum output-swing bandwidth	$V_{O(PP)}$ = 20 V, R_L = 2 kΩ,	A_{VD} = –1, C_L = 25 pF	25°C	478	637		478	637		kHz
ϕ_m	Phase margin at unity gain	V_I = 10 mV, C_L = 25 pF,	R_L = 2 kΩ, See Figure 2	25°C		57°			57°		

† Full range is –40°C to 85°C.

TLE2072M electrical characteristics at specified free-air temperature, $V_{CC\pm}$ = ±5 V (unless otherwise noted)

PARAMETER		TEST CONDITIONS		T_A†	TLE2072M MIN	TLE2072M TYP	TLE2072M MAX	TLE2072AM MIN	TLE2072AM TYP	TLE2072AM MAX	UNIT
V_{IO}	Input offset voltage	V_{IC} = 0, V_O = 0, R_S = 50 Ω,		25°C		0.9	6		0.65	3.5	mV
				Full range			10.5			8	
α_{VIO}	Temperature coefficient of input offset voltage			Full range		2.3	25*		2.3	25*	µV/°C
I_{IO}	Input offset current	V_{IC} = 0, V_O = 0, See Figure 4		25°C		5	100		5	100	pA
				Full range			20			20	nA
I_{IB}	Input bias current			25°C		15	175		15	175	pA
				Full range			60			60	nA
V_{ICR}	Common-mode input voltage range	R_S = 50 Ω		25°C	5 to −1	5 to −1.9		5 to −1	5 to −1.9		V
				Full range	5 to −0.8			5 to −0.8			
V_{OM+}	Maximum positive peak output voltage swing	I_O = −200 µA		25°C	3.8	4.1		3.8	4.1		V
				Full range	3.6			3.6			
		I_O = −2 mA		25°C	3.5	3.9		3.5	3.9		
				Full range	3.3			3.3			
		I_O = −20 mA		25°C	1.5	2.3		1.5	2.3		
				Full range	1.4			1.4			
V_{OM-}	Maximum negative peak output voltage swing	I_O = 200 µA		25°C	−3.8	−4.2		−3.8	−4.2		V
				Full range	−3.6			−3.6			
		I_O = 2 mA		25°C	−3.5	−4.1		−3.5	−4.1		
				Full range	−3.3			−3.3			
		I_O = 20 mA		25°C	−1.5	−2.4		−1.5	−2.4		
				Full range	−1.4			−1.4			
A_{VD}	Large-signal differential voltage amplification	V_O = ±2.3 V	R_L = 600 Ω	25°C	80	91		80	91		dB
				Full range	78			78			
			R_L = 2 kΩ	25°C	90	100		90	100		
				Full range	88			88			
			R_L = 10 kΩ	25°C	95	106		95	106		
				Full range	93			93			
r_i	Input resistance	V_{IC} = 0		25°C		10^{12}			10^{12}		Ω
c_i	Input capacitance	V_{IC} = 0, See Figure 5	Common mode	25°C		11			11		pF
			Differential	25°C		2.5			2.5		
z_o	Open-loop output impedance	f = 1 MHz		25°C		80			80		Ω
CMRR	Common-mode rejection ratio	V_{IC} = V_{ICR}min, V_O = 0, R_S = 50 Ω		25°C	70	89		70	89		dB
				Full range	68			68			

*On products compliant to MIL-PRF-38535, Class B, this parameter is not production tested.
† Full range is −55°C to 125°C.

TLE2072M electrical characteristics at specified free-air temperature, $V_{CC\pm}$ = ±5 V (unless otherwise noted) (continued)

PARAMETER		TEST CONDITIONS		T_A†	TLE2072M			TLE2072AM			UNIT
					MIN	TYP	MAX	MIN	TYP	MAX	
k_{SVR}	Supply-voltage rejection ratio ($\Delta V_{CC\pm}$ /ΔV_{IO})	$V_{CC\pm}$ = ±5 V to ±15 V, V_O = 0,	R_S = 50 Ω	Full range	80			80			dB
I_{CC}	Supply current (both channels)	V_O = 0,	No load	25°C	2.7	2.9	3.6	2.7	2.9	3.6	mA
				Full range			3.6			3.6	
a_x	Crosstalk attenuation	V_{IC} = 0,	R_L = 2 kΩ	25°C		120			120		dB
I_{OS}	Short-circuit output current	V_O = 0	V_{ID} = 1 V	25°C		–35			–35		mA
			V_{ID} = –1 V			45			45		

† Full range is –55°C to 125°C.

TLE2072M operating characteristics at specified free-air temperature, $V_{CC\pm}$ = ±5 V

PARAMETER		TEST CONDITIONS		T_A†	TLE2072M			TLE2072AM			UNIT
					MIN	TYP	MAX	MIN	TYP	MAX	
SR+	Positive slew rate	$V_{O(PP)}$ = ±2.3 V, A_{VD} = –1, C_L = 100 pF,	R_L = 2 kΩ, See Figure 1	25°C		35			35		V/µs
				Full range	18*			18*			
SR–	Negative slew rate			25°C		38			38		V/µs
				Full range	18*			18*			
t_s	Settling time	A_{VD} = –1, 2-V step, R_L = 1 kΩ, C_L = 100 pF	To 10 mV	25°C		0.25			0.25		µs
			To 1 mV			0.4			0.4		
V_n	Equivalent input noise voltage	R_S = 20 Ω, See Figure 3	f = 10 Hz	25°C		48	85*		48	85*	nV/√Hz
			f = 10 kHz			12	17*		12	17*	
$V_{N(PP)}$	Peak-to-peak equivalent input noise voltage		f = 10 Hz to 10 kHz	25°C		6			6		µV
			f = 0.1 Hz to 10 Hz			0.6			0.6		
I_n	Equivalent input noise current	V_{IC} = 0,	f = 10 kHz	25°C		2.8			2.8		fA/√Hz
THD + N	Total harmonic distortion plus noise	$V_{O(PP)}$ = 5 V, f = 1 kHz, R_S = 25 Ω	A_{VD} = 10, R_L = 2 kΩ,	25°C		0.013%			0.013%		
B_1	Unity-gain bandwidth	V_I = 10 mV, C_L = 25 pF,	R_L = 2 kΩ, See Figure 2	25°C		9.4			9.4		MHz
B_{OM}	Maximum output-swing bandwidth	$V_{O(PP)}$ = 4 V, R_L = 2 kΩ ,	A_{VD} = –1, C_L = 25 pF	25°C		2.8			2.8		MHz
ϕ_m	Phase margin at unity gain	V_I = 10 mV, C_L = 25 pF,	R_L = 2 kΩ, See Figure 2	25°C		56°			56°		

*On products compliant to MIL-PRF-38535, Class B, this parameter is not production tested.
† Full range is –55°C to 125°C.

TLE2072M electrical characteristics at specified free-air temperature, $V_{CC\pm}$ = ±15 V (unless otherwise noted)

PARAMETER		TEST CONDITIONS		T_A†	TLE2072M MIN	TLE2072M TYP	TLE2072M MAX	TLE2072AM MIN	TLE2072AM TYP	TLE2072AM MAX	UNIT
V_{IO}	Input offset voltage	V_{IC} = 0, V_O = 0, R_S = 50 Ω		25°C		1.1	6		0.7	3.5	mV
				Full range			10.5			8	
α_{VIO}	Temperature coefficient of input offset voltage			Full range		2.4	25*		2.4	25*	µV/°C
I_{IO}	Input offset current	V_{IC} = 0, V_O = 0, See Figure 4		25°C		6	100		6	100	pA
				Full range			20			20	nA
I_{IB}	Input bias current			25°C		20	175		20	175	pA
				Full range			60			60	nA
V_{ICR}	Common-mode input voltage range	R_S = 50 Ω		25°C	15 to −11	15 to −11.9		15 to −11	15 to −11.9		V
				Full range	15 to −10.8			15 to −10.8			
V_{OM+}	Maximum positive peak output voltage swing	I_O = −200 µA		25°C	13.8	14.1		13.8	14.1		V
				Full range	13.6			13.6			
		I_O = −2 mA		25°C	13.5	13.9		13.5	13.9		
				Full range	13.3			13.3			
		I_O = −20 mA		25°C	11.5	12.3		11.5	12.3		
				Full range	11.4			11.4			
V_{OM-}	Maximum negative peak output voltage swing	I_O = 200 µA		25°C	−13.8	−14.2		−13.8	−14.2		V
				Full range	−13.6			−13.6			
		I_O = 2 mA		25°C	−13.5	−14		−13.5	−14		
				Full range	−13.3			−13.3			
		I_O = 20 mA		25°C	−11.5	−12.4		−11.5	−12.4		
				Full range	−11.4			−11.4			
A_{VD}	Large-signal differential voltage amplification	V_O = ±10 V	R_L = 600 Ω	25°C	80	96		80	96		dB
				Full range	78			78			
			R_L = 2 kΩ	25°C	90	109		90	109		
				Full range	89			89			
			R_L = 10 kΩ	25°C	95	118		95	118		
				Full range	93			93			
r_i	Input resistance	V_{IC} = 0		25°C		10^{12}			10^{12}		Ω
c_i	Input capacitance	V_{IC} = 0, See Figure 5	Common mode	25°C		7.5			7.5		pF
			Differential	25°C		2.5			2.5		
z_o	Open-loop output impedance	f = 1 MHz		25°C		80			80		Ω
CMRR	Common-mode rejection ratio	V_{IC} = V_{ICR}min, V_O = 0, R_S = 50 Ω		25°C	80	98		80	98		dB
				Full range	78			78			
k_{SVR}	Supply-voltage rejection ratio ($\Delta V_{CC\pm}/\Delta V_{IO}$)	$V_{CC\pm}$ = ±5 V to ±15 V, V_O = 0, R_S = 50 Ω		25°C	82	99		82	99		dB
				Full range	80			80			

*On products compliant to MIL-PRF-38535, Class B, this parameter is not production tested.
† Full range is −55°C to 125°C.

TLE2072M electrical characteristics at specified free-air temperature, $V_{CC\pm}$ = ±15 V (unless otherwise noted)

PARAMETER		TEST CONDITIONS		T_A†	TLE2072M			TLE2072AM			UNIT
					MIN	TYP	MAX	MIN	TYP	MAX	
I_{CC}	Supply current (both channels)	V_O = 0,	No load	25°C	2.7	3.1	3.6	2.7	3.1	3.6	mA
				Full range			3.6			3.6	
a_x	Crosstalk attenuation	V_{IC} = 0,	R_L = 2 kΩ	25°C		120			120		dB
I_{OS}	Short-circuit output current	V_O = 0	V_{ID} = 1 V	25°C	−30	−45		−30	−45		mA
			V_{ID} = −1 V		30	48		30	48		

† Full range is −55°C to 125°C.

TLE2072M operating characteristics at specified free-air temperature, $V_{CC\pm}$ = ±15 V

PARAMETER		TEST CONDITIONS		T_A†	TLE2072M			TLE2072AM			UNIT
					MIN	TYP	MAX	MIN	TYP	MAX	
SR+	Positive slew rate	$V_{O(PP)}$ = 10 V, R_L = 2 kΩ, See Figure 1	A_{VD} = −1, C_L = 100 pF,	25°C	28	40		28	40		V/µs
				Full range	20			20			
SR−	Negative slew rate			25°C	30	45		30	45		V/µs
				Full range	20			20			
t_s	Settling time	A_{VD} = −1, 10-V step, R_L = 1 kΩ, C_L = 100 pF	To 10 mV	25°C		0.4			0.4		µs
			To 1 mV			1.5			1.5		
V_n	Equivalent input noise voltage	R_S = 20 Ω, See Figure 3	f = 10 Hz	25°C		48	85*		48	85*	nV/√Hz
			f = 10 kHz			12	17*		12	17*	
$V_{N(PP)}$	Peak-to-peak equivalent input noise voltage		f = 10 Hz to 10 kHz	25°C		6			6		µV
			f = 0.1 Hz to 10 Hz			0.6			0.6		
I_n	Equivalent input noise current	V_{IC} = 0,	f = 10 kHz	25°C		2.8			2.8		fA/√Hz
THD + N	Total harmonic distortion plus noise	$V_{O(PP)}$ = 20 V, f = 1 kHz, R_S = 25 Ω	A_{VD} = 10, R_L = 2 kΩ,	25°C		0.008%			0.008%		
B_1	Unity-gain bandwidth	V_I = 10 mV, C_L = 25 pF,	R_L = 2 kΩ, See Figure 2	25°C	8*	10		8*	10		MHz
B_{OM}	Maximum output-swing bandwidth	$V_{O(PP)}$ = 20 V, R_L = 2 kΩ,	A_{VD} = −1, C_L = 25 pF	25°C	478*	637		478*	637		kHz
ϕ_m	Phase margin at unity gain	V_I = 10 mV, C_L = 25 pF,	R_L = 2 kΩ, See Figure 2	25°C		57°			57°		

*On products compliant to MIL-PRF-38535, Class B, this parameter is not production tested.
† Full range is −55°C to 125°C.

TLE2072Y electrical characteristics at $V_{CC\pm} = \pm 15$ V, $T_A = 25°C$

PARAMETER		TEST CONDITIONS		TLE2072Y MIN	TLE2072Y TYP	TLE2072Y MAX	UNIT
V_{IO}	Input offset voltage	$V_{IC} = 0$, $V_O = 0$, $R_S = 50\ \Omega$			1.1	6	mV
I_{IO}	Input offset current	$V_{IC} = 0$, $V_O = 0$, See Figure 4			6	100	pA
I_{IB}	Input bias current				20	175	pA
V_{ICR}	Common-mode input voltage range	$R_S = 50\ \Omega$		15 to −11	15 to 11.9		V
V_{OM+}	Maximum positive peak output voltage swing	$I_O = -200\ \mu A$		13.8	14.1		V
		$I_O = -2$ mA		13.5	13.9		
		$I_O = -20$ mA		11.5	12.3		
V_{OM-}	Maximum negative peak output voltage swing	$I_O = 200\ \mu A$		−13.8	−14.2		V
		$I_O = 2$ mA		−13.5	−14		
		$I_O = 20$ mA		−11.5	−12.4		
A_{VD}	Large-signal differential voltage amplification	$V_O = \pm 10$ V	$R_L = 600\ \Omega$	80	96		dB
			$R_L = 2\ k\Omega$	90	109		
			$R_L = 10\ k\Omega$	95	118		
r_i	Input resistance	$V_{IC} = 0$			10^{12}		Ω
c_i	Input capacitance	$V_{IC} = 0$, See Figure 5	Common mode		7.5		pF
			Differential		2.5		
z_o	Open-loop output impedance	f = 1 MHz			80		Ω
CMRR	Common-mode rejection ratio	$V_{IC} = V_{ICR}$min, $V_O = 0$, $R_S = 50\ \Omega$		80	98		dB
k_{SVR}	Supply-voltage rejection ratio ($\Delta V_{CC\pm}/\Delta V_{IO}$)	$V_{CC\pm} = \pm 5$ V to ± 15 V, $V_O = 0$, $R_S = 50\ \Omega$		82	99		dB
I_{CC}	Supply current (both channels)	$V_O = 0$, No load		2.7	3.1	3.9	mA
I_{OS}	Short-circuit output current	$V_O = 0$	$V_{ID} = 1$ V	−30	−45		mA
			$V_{ID} = -1$ V	30	48		

TLE2074C electrical characteristics at specified free-air temperature, $V_{CC\pm}$ = ±5 V (unless otherwise noted)

PARAMETER		TEST CONDITIONS		T_A†	TLE2074C MIN	TLE2074C TYP	TLE2074C MAX	TLE2074AC MIN	TLE2074AC TYP	TLE2074AC MAX	UNIT
V_{IO}	Input offset voltage	V_{IC} = 0, V_O = 0, R_S = 50 Ω		25°C		−1.6	5		−0.5	3	mV
				Full range			7.1			5.1	
α_{VIO}	Temperature coefficient of input offset voltage			Full range		10.1	30		10.1	30	μV/°C
I_{IO}	Input offset current	V_{IC} = 0, V_O = 0, See Figure 4		25°C		15	100		15	100	pA
				Full range			1400			1400	
I_{IB}	Input bias current			25°C		20	175		20	175	pA
				Full range			5000			5000	
V_{ICR}	Common-mode input voltage range	R_S = 50 Ω		25°C	5 to −1	5 to −1.9		5 to −1	5 to −1.9		V
				Full range	5 to −0.9			5 to −0.9			
V_{OM+}	Maximum positive peak output voltage swing	I_O = −200 μA		25°C	3.8	4.1		3.8	4.1		V
				Full range	3.7			3.7			
		I_O = −2 mA		25°C	3.5	3.9		3.5	3.9		
				Full range	3.4			3.4			
		I_O = −20 mA		25°C	1.5	2.3		1.5	2.3		
				Full range	1.5			1.5			
V_{OM-}	Maximum negative peak output voltage swing	I_O = 200 μA		25°C	−3.8	−4.2		−3.8	−4.2		V
				Full range	−3.7			−3.7			
		I_O = 2 mA		25°C	−3.5	−4.1		−3.5	−4.1		
				Full range	−3.4			−3.4			
		I_O = 20 mA		25°C	−1.5	−2.4		−1.5	−2.4		
				Full range	−1.5			−1.5			
A_{VD}	Large-signal differential voltage amplification	V_O = ±2.3 V	R_L = 600 Ω	25°C	80	91		80	91		dB
				Full range	79			79			
			R_L = 2 kΩ	25°C	90	100		90	100		
				Full range	89			89			
			R_L = 10 kΩ	25°C	95	106		95	106		
				Full range	94			94			
r_i	Input resistance	V_{IC} = 0		25°C		10^{12}			10^{12}		Ω
c_i	Input capacitance: Common mode	V_{IC} = 0, See Figure 5		25°C		11			11		pF
	Input capacitance: Differential			25°C		2.5			2.5		
z_o	Open-loop output impedance	f = 1 MHz		25°C		80			80		Ω
CMRR	Common-mode rejection ratio	V_{IC} = V_{ICR}min, V_O = 0, R_S = 50 Ω		25°C	70	89		70	89		dB
				Full range	68			68			
k_{SVR}	Supply-voltage rejection ratio ($\Delta V_{CC\pm}/\Delta V_{IO}$)	$V_{CC\pm}$ = ±5 V to ±15 V, V_O = 0, R_S = 50 Ω		25°C	82	99		82	99		dB
				Full range	80			80			

† Full range is 0°C to 70°C.

TLE2074C electrical characteristics at specified free-air temperature, $V_{CC\pm}$ = ±5 V (unless otherwise noted) (continued)

PARAMETER		TEST CONDITIONS		T_A†	TLE2074C			TLE2074AC			UNIT
					MIN	TYP	MAX	MIN	TYP	MAX	
I_{CC}	Supply current (four amplifiers)	V_O = 0,	No load	25°C	5.2	6.3	7.5	5.2	6.3	7.5	mA
				Full range			7.5			7.5	
	Crosstalk attenuation	V_{IC} = 0,	R_L = 2 kΩ	25°C		120			120		dB
I_{OS}	Short-circuit output current	V_O = 0	V_{ID} = 1 V	25°C		−35			−35		mA
			V_{ID} = −1 V			45			45		

† Full range is 0°C to 70°C.

TLE2074C operating characteristics at specified free-air temperature, $V_{CC\pm}$ = ±5 V

PARAMETER		TEST CONDITIONS		T_A†	TLE2074C			TLE2074AC			UNIT
					MIN	TYP	MAX	MIN	TYP	MAX	
SR+	Positive slew rate	$V_{O(PP)}$ = ±2.3 V, A_{VD} = −1, C_L = 100 pF,	R_L = 2 kΩ, See Figure 1	25°C		35			35		V/µs
				Full range	22			22			
SR−	Negative slew rate			25°C		38			38		V/µs
				Full range	22			22			
t_s	Settling time	A_{VD} = −1, 2-V step, R_L = 1 kΩ, C_L = 100 pF	To 10 mV	25°C		0.25			0.25		µs
			To 1 mV			0.4			0.4		
V_n	Equivalent input noise voltage	R_S = 20 Ω, See Figure 3	f = 10 Hz	25°C		48	85		48	85	nV/√Hz
			f = 10 kHz			12	17		12	17	
$V_{N(PP)}$	Peak-to-peak equivalent input noise voltage		f = 10 Hz to 10 kHz	25°C		6			6		µV
			f = 0.1Hz to 10 Hz			0.6			0.6		
I_n	Equivalent input noise current	V_{IC} = 0,	f = 10 kHz	25°C		2.8			2.8		fA/√Hz
THD + N	Total harmonic distortion plus noise	$V_{O(PP)}$ = 5 V, f = 1 kHz, R_S = 25 Ω	A_{VD} = 10, R_L = 2 kΩ,	25°C		0.013%			0.013%		
B_1	Unity-gain bandwidth	V_I = 10 mV, C_L = 25 pF,	R_L = 2 kΩ, See Figure 2	25°C		9.4			9.4		MHz
B_{OM}	Maximum output-swing bandwidth	$V_{O(PP)}$ = 4 V, R_L = 2 kΩ ,	A_{VD} = −1, C_L = 25 pF	25°C		2.8			2.8		MHz
ϕ_m	Phase margin at unity gain	V_I = 10 mV, C_L = 25 pF,	R_L = 2 kΩ, See Figure 2	25°C		56°			56°		

† Full range is 0°C to 70°C.

TLE2074C electrical characteristics at specified free-air temperature, $V_{CC\pm}$ = ±15 V (unless otherwise noted)

PARAMETER		TEST CONDITIONS		T_A†	TLE2074C MIN	TLE2074C TYP	TLE2074C MAX	TLE2074AC MIN	TLE2074AC TYP	TLE2074AC MAX	UNIT
V_{IO}	Input offset voltage	V_{IC} = 0, V_O = 0, R_S = 50 Ω		25°C		−1.6	5		−0.5	3	mV
				Full range			7.1			5.1	
α_{VIO}	Temperature coefficient of input offset voltage			Full range		10.1	30		10.1	30	µV/°C
I_{IO}	Input offset current	V_{IC} = 0, V_O = 0, See Figure 4		25°C		15	100		15	100	pA
				Full range			1400			1400	
I_{IB}	Input bias current			25°C		25	175		25	175	pA
				Full range			5000			5000	
V_{ICR}	Common-mode input voltage range	R_S = 50 Ω		25°C	15 to −11	15 to −11.9		15 to −11	15 to −11.9		V
				Full range	15 to −10.9			15 to −10.9			
V_{OM+}	Maximum positive peak output voltage swing	I_O = −200 µA		25°C	13.8	14.1		13.8	14.1		V
				Full range	13.7			13.7			
		I_O = −2 mA		25°C	13.5	13.9		13.5	13.9		
				Full range	13.4			13.4			
		I_O = −20 mA		25°C	11.5	12.3		11.5	12.3		
				Full range	11.5			11.5			
V_{OM-}	Maximum negative peak output voltage swing	I_O = 200 µA		25°C	−13.8	−14.2		−13.8	−14.2		V
				Full range	−13.7			−13.7			
		I_O = 2 mA		25°C	−13.7	−14		−13.7	−14		
				Full range	−13.6			−13.6			
		I_O = 20 mA		25°C	−11.5	−12.4		−11.5	−12.4		
				Full range	−11.5			−11.5			
A_{VD}	Large-signal differential voltage amplification	V_O = ±10 V	R_L = 600 Ω	25°C	80	96		80	96		dB
				Full range	79			79			
			R_L = 2 kΩ	25°C	90	109		90	109		
				Full range	89			89			
			R_L = 10 kΩ	25°C	95	118		95	118		
				Full range	94			94			
r_i	Input resistance	V_{IC} = 0		25°C		10^{12}			10^{12}		Ω
c_i	Input capacitance, Common mode	V_{IC} = 0, See Figure 5		25°C		7.5			7.5		pF
	Input capacitance, Differential			25°C		2.5			2.5		
z_o	Open-loop output impedance	f = 1 MHz		25°C		80			80		Ω
CMRR	Common-mode rejection ratio	V_{IC} = V_{ICR}min, V_O = 0, R_S = 50 Ω		25°C	80	98		80	98		dB
				Full range	79			79			
k_{SVR}	Supply-voltage rejection ratio ($\Delta V_{CC\pm}/\Delta V_{IO}$)	$V_{CC\pm}$ = ±5 V to ±15 V, V_O = 0, R_S = 50 Ω		25°C	82	99		82	99		dB
				Full range	81			81			

† Full range is 0°C to 70°C.

TLE2074C electrical characteristics at specified free-air temperature, $V_{CC\pm}$ = ±15 V (unless otherwise noted) (continued)

PARAMETER		TEST CONDITIONS		T_A†	TLE2074C			TLE2074AC			UNIT
					MIN	TYP	MAX	MIN	TYP	MAX	
I_{CC}	Supply current (four amplifiers)	V_O = 0,	No load	25°C	5.2	6.5	7.5	5.2	6.5	7.5	mA
				Full range			7.5			7.5	
	Crosstalk attenuation	V_{IC} = 0,	R_L = 2 kΩ	25°C		120			120		dB
I_{OS}	Short-circuit output current	V_O = 0	V_{ID} = 1 V	25°C	−30	−45		−30	−45		mA
			V_{ID} = −1 V		30	48		30	48		

† Full range is 0°C to 70°C.

TLE2074C operating characteristics at specified free-air temperature, $V_{CC\pm}$ = ±15 V

PARAMETER		TEST CONDITIONS		T_A†	TLE2074C			TLE2074AC			UNIT
					MIN	TYP	MAX	MIN	TYP	MAX	
SR+	Positive slew rate	$V_{O(PP)}$ = 10 V, R_L = 2 kΩ, See Figure 1	A_{VD} = −1, C_L = 100 pF,	25°C	25	40		25	40		V/µs
				Full range	22			22			
SR−	Negative slew rate			25°C	30	45		30	45		V/µs
				Full range	25			25			
t_s	Settling time	A_{VD} = −1, 10-V step, R_L = 1 kΩ, C_L = 100 pF	To 10 mV	25°C		0.4			0.4		µs
			To 1 mV			1.5			1.5		
V_n	Equivalent input noise voltage	R_S = 20 Ω, See Figure 3	f = 10 Hz	25°C		48	85		48	85	nV/√Hz
			f = 10 kHz			12	17		12	17	
$V_{N(PP)}$	Peak-to-peak equivalent input noise voltage		f = 10 Hz to 10 kHz	25°C		6			6		µV
			f = 0.1 Hz to 10 Hz			0.6			0.6		
I_n	Equivalent input noise current	V_{IC} = 0,	f = 10 kHz	25°C		2.8			2.8		fA/√Hz
THD + N	Total harmonic distortion plus noise	$V_{O(PP)}$ = 20 V, f = 1 kHz, R_S = 25 Ω	A_{VD} = 10, R_L = 2 kΩ,	25°C		0.008%			0.008%		
B_1	Unity-gain bandwidth	V_I = 10 mV, C_L = 25 pF,	R_L = 2 kΩ, See Figure 2	25°C	8	10		8	10		MHz
B_{OM}	Maximum output-swing bandwidth	$V_{O(PP)}$ = 20 V, R_L = 2 kΩ,	A_{VD} = −1, C_L = 25 pF	25°C	478	637		478	637		kHz
ϕ_m	Phase margin at unity gain	V_I = 10 mV, C_L = 25 pF,	R_L = 2 kΩ, See Figure 2	25°C		57°			57°		

† Full range is 0°C to 70°C.

TLE2074I electrical characteristics at specified free-air temperature, $V_{CC\pm} = \pm 5$ V (unless otherwise noted)

PARAMETER		TEST CONDITIONS		T_A†	TLE2074I MIN	TLE2074I TYP	TLE2074I MAX	TLE2074AI MIN	TLE2074AI TYP	TLE2074AI MAX	UNIT
V_{IO}	Input offset voltage	$V_{IC} = 0$, $V_O = 0$, $R_S = 50\ \Omega$		25°C		−1.6	5		−0.5	3	mV
				Full range			9			7	
α_{VIO}	Temperature coefficient of input offset voltage			Full range		10.1	30		10.1	30	μV/°C
I_{IO}	Input offset current	$V_{IC} = 0$, $V_O = 0$, See Figure 4		25°C		15	100		15	100	pA
				Full range			5			5	nA
I_{IB}	Input bias current			25°C		20	175		20	175	pA
				Full range			10			10	nA
V_{ICR}	Common-mode input voltage range	$R_S = 50\ \Omega$		25°C	5 to −1	5 to −1.9		5 to −1	5 to −1.9		V
				Full range	5 to −0.8			5 to −0.8			
V_{OM+}	Maximum positive peak output voltage swing	$I_O = -200\ \mu A$		25°C	3.8	4.1		3.8	4.1		V
				Full range	3.7			3.7			
		$I_O = -2$ mA		25°C	3.5	3.9		3.5	3.9		
				Full range	3.4			3.4			
		$I_O = -20$ mA		25°C	1.5	2.3		1.5	2.3		
				Full range	1.5			1.5			
V_{OM-}	Maximum negative peak output voltage swing	$I_O = 200\ \mu A$		25°C	−3.8	−4.2		−3.8	−4.2		V
				Full range	−3.7			−3.7			
		$I_O = 2$ mA		25°C	−3.5	−4.1		−3.5	−4.1		
				Full range	−3.4			−3.4			
		$I_O = 20$ mA		25°C	−1.5	−2.4		−1.5	−2.4		
				Full range	−1.5			−1.5			
A_{VD}	Large-signal differential voltage amplification	$V_O = \pm 2.3$ V	$R_L = 600\ \Omega$	25°C	80	91		80	91		dB
				Full range	79			79			
			$R_L = 2\ k\Omega$	25°C	90	100		90	100		
				Full range	89			89			
			$R_L = 10\ k\Omega$	25°C	95	106		95	106		
				Full range	94			94			
r_i	Input resistance	$V_{IC} = 0$		25°C		10^{12}			10^{12}		Ω
c_i	Input capacitance, Common mode	$V_{IC} = 0$, See Figure 5		25°C		11			11		pF
	Input capacitance, Differential			25°C		2.5			2.5		
z_o	Open-loop output impedance	f = 1 MHz		25°C		80			80		Ω
CMRR	Common-mode rejection ratio	$V_{IC} = V_{ICR}$min, $V_O = 0$, $R_S = 50\ \Omega$		25°C	70	89		70	89		dB
				Full range	68			68			
k_{SVR}	Supply-voltage rejection ratio ($\Delta V_{CC\pm}/\Delta V_{IO}$)	$V_{CC\pm} = \pm 5$ V to ± 15 V, $V_O = 0$, $R_S = 50\ \Omega$		25°C	82	99		82	99		dB
				Full range	80			80			

† Full range is −40°C to 85°C.

TLE2074I electrical characteristics at specified free-air temperature, $V_{CC\pm} = \pm 5$ V (unless otherwise noted) (continued)

PARAMETER		TEST CONDITIONS		T_A†	TLE2074I			TLE2074AI			UNIT
					MIN	TYP	MAX	MIN	TYP	MAX	
I_{CC}	Supply current (four amplifiers)	$V_O = 0$,	No load	25°C	5.2	6.3	7.5	5.2	6.3	7.5	mA
				Full range			7.5			7.5	
	Crosstalk attenuation	$V_{IC} = 0$,	$R_L = 2$ kΩ	25°C		120			120		dB
I_{OS}	Short-circuit output current	$V_O = 0$	$V_{ID} = 1$ V	25°C		−35			−35		mA
			$V_{ID} = -1$ V			45			45		

† Full range is −40°C to 85°C.

TLE2074I operating characteristics at specified free-air temperature, $V_{CC\pm} = \pm 5$ V

PARAMETER		TEST CONDITIONS		T_A†	TLE2074I			TLE2074AI			UNIT
					MIN	TYP	MAX	MIN	TYP	MAX	
SR+	Positive slew rate	$V_{O(PP)} = \pm 2.3$ V, $A_{VD} = -1$, $C_L = 100$ pF,	$R_L = 2$ kΩ, See Figure 1	25°C		35			35		V/µs
				Full range	20			20			
SR−	Negative slew rate			25°C		38			38		V/µs
				Full range	20			20			
t_s	Settling time	$A_{VD} = -1$, 2-V step, $R_L = 1$ kΩ, $C_L = 100$ pF	To 10 mV	25°C		0.25			0.25		µs
			To 1 mV			0.4			0.4		
V_n	Equivalent input noise voltage	$R_S = 20$ Ω, See Figure 3	f = 10 Hz	25°C		48	85		48	85	nV/√Hz
			f = 10 kHz			12	17		12	17	
$V_{N(PP)}$	Peak-to-peak equivalent input noise voltage		f = 10 Hz to 10 kHz	25°C		6			6		µV
			f = 0.1 Hz to 10 Hz			0.6			0.6		
I_n	Equivalent input noise current	$V_{IC} = 0$,	f = 10 kHz	25°C		2.8			2.8		fA/√Hz
THD + N	Total harmonic distortion plus noise	$V_{O(PP)} = 5$ V, f = 1 kHz, $R_S = 25$ Ω	$A_{VD} = 10$, $R_L = 2$ kΩ,	25°C		0.013%			0.013%		
B_1	Unity-gain bandwidth	$V_I = 10$ mV, $C_L = 25$ pF,	$R_L = 2$ kΩ, See Figure 2	25°C		9.4			9.4		MHz
B_{OM}	Maximum output-swing bandwidth	$V_{O(PP)} = 4$ V, $R_L = 2$ kΩ ,	$A_{VD} = -1$, $C_L = 25$ pF	25°C		2.8			2.8		MHz
ϕ_m	Phase margin at unity gain	$V_I = 10$ mV, $C_L = 25$ pF,	$R_L = 2$ kΩ, See Figure 2	25°C		56°			56°		

† Full range is −40°C to 85°C.

TLE2074I electrical characteristics at specified free-air temperature, $V_{CC\pm}$ = ±15 V (unless otherwise noted)

PARAMETER		TEST CONDITIONS		T_A†	TLE2074I MIN	TLE2074I TYP	TLE2074I MAX	TLE2074AI MIN	TLE2074AI TYP	TLE2074AI MAX	UNIT
V_{IO}	Input offset voltage	V_{IC} = 0, V_O = 0, R_S = 50 Ω		25°C		−1.6	5		−0.5	3	mV
				Full range			9			7	
α_{VIO}	Temperature coefficient of input offset voltage			Full range		10.1	30		10.1	30	µV/°C
I_{IO}	Input offset current	V_{IC} = 0, V_O = 0, See Figure 4		25°C		15	100		15	100	pA
				Full range			5			5	nA
I_{IB}	Input bias current			25°C		25	175		25	175	pA
				Full range			10			10	nA
V_{ICR}	Common-mode input voltage range	R_S = 50 Ω		25°C	15 to −11	15 to −11.9		15 to −11	15 to −11.9		V
				Full range	15 to −10.8			15 to −10.8			
V_{OM+}	Maximum positive peak output voltage swing	I_O = −200 µA		25°C	13.8	14.1		13.8	14.1		V
				Full range	13.7			13.7			
		I_O = −2 mA		25°C	13.5	13.9		13.5	13.9		
				Full range	13.4			13.4			
		I_O = −20 mA		25°C	11.5	12.3		11.5	12.3		
				Full range	11.5			11.5			
V_{OM-}	Maximum negative peak output voltage swing	I_O = 200 µA		25°C	−13.8	−14.2		−13.8	−14.2		V
				Full range	−13.7			−13.7			
		I_O = 2 mA		25°C	−13.5	−14		−13.5	−14		
				Full range	−13.4			−13.4			
		I_O = 20 mA		25°C	−11.5	−12.4		−11.5	−12.4		
				Full range	−11.5			−11.5			
A_{VD}	Large-signal differential voltage amplification	V_O = ±10 V	R_L = 600 Ω	25°C	80	96		80	96		dB
				Full range	79			79			
			R_L = 2 kΩ	25°C	90	109		90	109		
				Full range	89			89			
			R_L = 10 kΩ	25°C	95	118		95	118		
				Full range	94			94			
r_i	Input resistance	V_{IC} = 0		25°C		10^{12}			10^{12}		Ω
c_i	Input capacitance, Common mode	V_{IC} = 0, See Figure 5		25°C		7.5			7.5		pF
	Input capacitance, Differential			25°C		2.5			2.5		
z_o	Open-loop output impedance	f = 1 MHz		25°C		80			80		Ω
CMRR	Common-mode rejection ratio	V_{IC} = V_{ICR}min, V_O = 0, R_S = 50 Ω		25°C	80	98		80	98		dB
				Full range	79			79			
k_{SVR}	Supply-voltage rejection ratio ($\Delta V_{CC\pm}/\Delta V_{IO}$)	$V_{CC\pm}$ = ±5 V to ±15 V, V_O = 0, R_S = 50 Ω		25°C	82	99		82	99		dB
				Full range	80			80			

† Full range is −40°C to 85°C.

TLE2074I electrical characteristics at specified free-air temperature, $V_{CC\pm}$ = ±15 V (unless otherwise noted) (continued)

PARAMETER		TEST CONDITIONS		T_A†	TLE2074I			TLE2074AI			UNIT
					MIN	TYP	MAX	MIN	TYP	MAX	
I_{CC}	Supply current (four amplifiers)	V_O = 0,	No load	25°C	5.2	6.5	7.5	5.2	6.5	7.5	mA
				Full range			7.5			7.5	
	Crosstalk attenuation	V_{IC} = 0,	R_L = 2 kΩ	25°C		120			120		dB
I_{OS}	Short-circuit output current	V_O = 0	V_{ID} = 1 V	25°C	−30	−45		−30	−45		mA
			V_{ID} = −1 V		30	48		30	48		

† Full range is −40°C to 85°C.

TLE2074I operating characteristics at specified free-air temperature, $V_{CC\pm}$ = ±15 V

PARAMETER		TEST CONDITIONS		T_A†	TLE2074I			TLE2074AI			UNIT
					MIN	TYP	MAX	MIN	TYP	MAX	
SR+	Positive slew rate	$V_{O(PP)}$ = ±10 V, A_{VD} = −1, C_L = 100 pF,	R_L = 2 kΩ, See Figure 1	25°C	25	40		25	40		V/µs
				Full range	19			19			
SR−	Negative slew rate			25°C	30	45		30	45		V/µs
				Full range	22			22			
t_s	Settling time	A_{VD} = −1, 10-V step, R_L = 1 kΩ, C_L = 100 pF	To 10 mV	25°C		0.4			0.4		µs
			To 1 mV			1.5			1.5		
V_n	Equivalent input noise voltage	R_S = 20 Ω, See Figure 3	f = 10 Hz	25°C		48	85		48	85	nV/√Hz
			f = 10 kHz			12	17		12	17	
$V_{N(PP)}$	Peak-to-peak equivalent input noise voltage		f = 10 Hz to 10 kHz	25°C		6			6		µV
			f = 0.1 Hz to 10 Hz			0.6			0.6		
I_n	Equivalent input noise current	V_{IC} = 0,	f = 10 kHz	25°C		2.8			2.8		fA/√Hz
THD + N	Total harmonic distortion plus noise	$V_{O(PP)}$ = 20 V, f = 1 kHz, R_S = 25 Ω	A_{VD} = 10, R_L = 2 kΩ,	25°C		0.008%			0.008%		
B_1	Unity-gain bandwidth	V_I = 10 mV, C_L = 25 pF,	R_L = 2 kΩ, See Figure 2	25°C	8	10		8	10		MHz
B_{OM}	Maximum output-swing bandwidth	$V_{O(PP)}$ = 20 V, R_L = 2 kΩ,	A_{VD} = −1, C_L = 25 pF	25°C	478	637		478	637		kHz
ϕ_m	Phase margin at unity gain	V_I = 10 mV, C_L = 25 pF,	R_L = 2 kΩ, See Figure 2	25°C		57°			57°		

† Full range is −40°C to 85°C.

TLE2074M electrical characteristics at specified free-air temperature, $V_{CC\pm}$ = ±5 V (unless otherwise noted)

PARAMETER		TEST CONDITIONS	T_A†	TLE2074M MIN	TLE2074M TYP	TLE2074M MAX	TLE2074AM MIN	TLE2074AM TYP	TLE2074AM MAX	UNIT
V_{IO}	Input offset voltage	V_{IC} = 0, V_O = 0, R_S = 50Ω	25°C		−1.6	5		−0.5	3	mV
			Full range			10.5			8.5	
α_{VIO}	Temperature coefficient of input offset voltage		Full range		10.1	30‡		10.1	30‡	μV/°C
I_{IO}	Input offset current	V_{IC} = 0, V_O = 0, See Figure 4	25°C		15	100		15	100	pA
			Full range			20			20	nA
I_{IB}	Input bias current		25°C		20	175		20	175	pA
			Full range			60			60	nA
V_{ICR}	Common-mode input voltage range	R_S = 50 Ω	25°C	5 to −1	5 to −1.9		5 to −1	5 to −1.9		V
			Full range	5 to −0.8			5 to −0.8			
V_{OM+}	Maximum positive peak output voltage swing	I_O = −200 μA	25°C	3.8	4.1		3.8	4.1		V
			Full range	3.6			3.6			
		I_O = −2 mA	25°C	3.5	3.9		3.5	3.9		
			Full range	3.3			3.3			
		I_O = −20 mA	25°C	1.5	2.3		1.5	2.3		
			Full range	1.4			1.4			
V_{OM-}	Maximum negative peak output voltage swing	I_O = 200 μA	25°C	−3.8	−4.2		−3.8	−4.2		V
			Full range	−3.6			−3.6			
		I_O = 2 mA	25°C	−3.5	−4.1		−3.5	−4.1		
			Full range	−3.3			−3.3			
		I_O = 20 mA	25°C	−1.5	−2.4		−1.5	−2.4		
			Full range	−1.4			−1.4			
A_{VD}	Large-signal differential voltage amplification	V_O = ±2.3 V, R_L = 600 Ω	25°C	80	91		80	91		dB
			Full range	78			78			
		R_L = 2 kΩ	25°C	90	100		90	100		
			Full range	88			88			
		R_L = 10 kΩ	25°C	95	106		95	106		
			Full range	93			93			
r_i	Input resistance	V_{IC} = 0	25°C		10^{12}			10^{12}		Ω
c_i	Input capacitance, Common mode	V_{IC} = 0, See Figure 5	25°C		11			11		pF
	Input capacitance, Differential		25°C		2.5			2.5		
z_o	Open-loop output impedance	f = 1 MHz	25°C		80			80		Ω
CMRR	Common-mode rejection ratio	V_{IC} = V_{ICR}min, V_O = 0, R_S = 50 Ω	25°C	70	89		70	89		dB
			Full range	68			68			
k_{SVR}	Supply-voltage rejection ratio ($\Delta V_{CC\pm}/\Delta V_{IO}$)	$V_{CC\pm}$ = ±5 V to ±15 V, V_O = 0, R_S = 50 Ω	25°C	82	99		82	99		dB
			Full range	80			80			

† Full range is −55°C to 125°C.
‡ On products compliant to MIL-PRF-38535, Class B, this parameter is not production tested.

TLE2074M electrical characteristics at specified free-air temperature, $V_{CC\pm}$ = ±5 V (unless otherwise noted) (continued)

PARAMETER		TEST CONDITIONS		T_A†	TLE2074M			TLE2074AM			UNIT
					MIN	TYP	MAX	MIN	TYP	MAX	
I_{CC}	Supply current (four amplifiers)	V_O = 0,	No load	25°C	5.2	6.3	7.5	5.2	6.3	7.5	mA
				Full range			7.5			7.5	
	Crosstalk attenuation	V_{IC} = 0,	R_L = 2 kΩ	25°C		120			120		dB
I_{OS}	Short-circuit output current	V_O = 0	V_{ID} = 1 V	25°C		−35			−35		mA
			V_{ID} = −1 V			45			45		

† Full range is −55°C to 125°C.

TLE2074M operating characteristics at specified free-air temperature, $V_{CC\pm}$ = ±5 V

PARAMETER		TEST CONDITIONS		T_A†	TLE2074M			TLE2074AM			UNIT
					MIN	TYP	MAX	MIN	TYP	MAX	
SR+	Positive slew rate	$V_{O(PP)}$ = ±2.3 V, A_{VD} = −1, C_L = 100 pF,	R_L = 2 kΩ, See Figure 1	25°C		35			35		V/µs
				Full range	18‡			18‡			
SR−	Negative slew rate			25°C		38			38		V/µs
				Full range	18‡			18‡			
t_s	Settling time	A_{VD} = −1, 2-V step, R_L = 1 kΩ, C_L = 100 pF	To 10 mV	25°C		0.25			0.25		µs
			To 1 mV			0.4			0.4		
V_n	Equivalent input noise voltage	R_S = 20 Ω, See Figure 3	f = 10 Hz	25°C		48	85‡		48	85‡	nV/√Hz
			f = 10 kHz			12	17‡		12	17‡	
$V_{N(PP)}$	Peak-to-peak equivalent input noise voltage		f = 10 Hz to 10 kHz	25°C		6			6		µV
			f = 0.1 Hz to 10 Hz			0.6			0.6		
I_n	Equivalent input noise current	V_{IC} = 0,	f = 10 kHz	25°C		2.8			2.8		fA/√Hz
THD + N	Total harmonic distortion plus noise	$V_{O(PP)}$ = 5 V, f = 1 kHz, R_S = 25 Ω	A_{VD} = 10, R_L = 2 kΩ,	25°C		0.013%			0.013%		
B_1	Unity-gain bandwidth	V_I = 10 mV, C_L = 25 pF,	R_L = 2 kΩ, See Figure 2	25°C		9.4			9.4		MHz
B_{OM}	Maximum output-swing bandwidth	$V_{O(PP)}$ = 4 V, R_L = 2 kΩ,	A_{VD} = −1, C_L = 25 pF	25°C		2.8			2.8		MHz
f_m	Phase margin at unity gain	V_I = 10 mV, C_L = 25 pF,	R_L = 2 kΩ, See Figure 2	25°C		56°			56°		

† Full range is −55°C to 125°C.
‡ On products compliant to MIL-PRF-38535, Class B, this parameter is not production tested.

TLE2074M electrical characteristics at specified free-air temperature, $V_{CC\pm}$ = ±15 V (unless otherwise noted)

PARAMETER		TEST CONDITIONS		T_A†	TLE2074M MIN	TLE2074M TYP	TLE2074M MAX	TLE2074AM MIN	TLE2074AM TYP	TLE2074AM MAX	UNIT
V_{IO}	Input offset voltage	V_{IC} = 0, V_O = 0, R_S = 50 Ω		25°C		−1.6	5		−0.5	3	mV
				Full range			10.5			8.5	
α_{VIO}	Temperature coefficient of input offset voltage			Full range		10.1	30‡		10.1	30‡	μV/°C
I_{IO}	Input offset current	V_{IC} = 0, V_O = 0, See Figure 4		25°C		15	100		15	100	pA
				Full range			20			20	nA
I_{IB}	Input bias current			25°C		25	175		25	175	pA
				Full range			60			60	nA
V_{ICR}	Common-mode input voltage range	R_S = 50 Ω		25°C	15 to −11	15 to −11.9		15 to −11	15 to −11.9		V
				Full range	15 to −10.8			15 to −10.8			
V_{OM+}	Maximum positive peak output voltage swing	I_O = −200 μA		25°C	13.8	14.1		13.8	14.1		V
				Full range	13.6			13.6			
		I_O = −2 mA		25°C	13.5	13.9		13.5	13.9		
				Full range	13.3			13.3			
		I_O = −20 mA		25°C	11.5	12.3		11.5	12.3		
				Full range	11.4			11.4			
V_{OM-}	Maximum negative peak output voltage swing	I_O = 200 μA		25°C	−13.8	−14.2		−13.8	−14.2		V
				Full range	−13.6			−13.6			
		I_O = 2 mA		25°C	−13.5	−14		−13.5	−14		
				Full range	−13.3			−13.3			
		I_O = 20 mA		25°C	−11.5	−12.4		−11.5	−12.4		
				Full range	−11.4			−11.4			
A_{VD}	Large-signal differential voltage amplification	V_O = ±10 V	R_L = 600 Ω	25°C	80	96		80	96		dB
				Full range	78			78			
			R_L = 2 kΩ	25°C	90	109		90	109		
				Full range	88			88			
			R_L = 10 kΩ	25°C	95	118		95	118		
				Full range	93			93			
r_i	Input resistance	V_{IC} = 0		25°C		10^{12}			10^{12}		Ω
c_i	Input capacitance: Common mode	V_{IC} = 0, See Figure 5		25°C		7.5			7.5		pF
	Input capacitance: Differential			25°C		2.5			2.5		
z_o	Open-loop output impedance	f = 1 MHz		25°C		80			80		Ω
CMRR	Common-mode rejection ratio	V_{IC} = V_{ICR}min, V_O = 0, R_S = 50 Ω		25°C	80	98		80	98		dB
				Full range	78			78			
k_{SVR}	Supply-voltage rejection ratio ($\Delta V_{CC\pm}/\Delta V_{IO}$)	$V_{CC\pm}$ = ±5 V to ±15 V, V_O = 0, R_S = 50 Ω		25°C	82	99		82	99		dB
				Full range	80			80			

† Full range is −55°C to 125°C.
‡ On products compliant to MIL-PRF-38535, Class B, this parameter is not production tested.

TLE2074M electrical characteristics at specified free-air temperature, $V_{CC\pm}$ = ±15 V (unless otherwise noted) (continued)

PARAMETER		TEST CONDITIONS		T_A†	TLE2074M			TLE2074AM			UNIT
					MIN	TYP	MAX	MIN	TYP	MAX	
I_{CC}	Supply current (four amplifiers)	V_O = 0,	No load	25°C	5.2	6.5	7.5	5.2	6.5	7.5	mA
				Full range			7.5			7.5	
	Crosstalk attenuation	V_{IC} = 0,	R_L = 2 kΩ	25°C		120			120		dB
I_{OS}	Short-circuit output current	V_O = 0	V_{ID} = 1 V	25°C	−30	−45		−30	−45		mA
			V_{ID} = −1 V		30	48		30	48		

† Full range is −55°C to 125°C.

TLE2074M operating characteristics at specified free-air temperature, $V_{CC\pm}$ = ±15 V

PARAMETER		TEST CONDITIONS		T_A†	TLE2074M			TLE2074AM			UNIT
					MIN	TYP	MAX	MIN	TYP	MAX	
SR+	Positive slew rate	$V_{O(PP)}$ = 10 V, R_L = 2 kΩ, See Figure 1	A_{VD} = −1, C_L = 100 pF,	25°C	25	40		25	40		V/µs
				Full range	17			17			
SR−	Negative slew rate			25°C	30	45		30	45		V/µs
				Full range	20			20			
t_s	Settling time	A_{VD} = −1, 10-V step, R_L = 1 kΩ, C_L = 100 pF	To 10 mV	25°C		0.4			0.4		µs
			To 1 mV			1.5			1.5		
V_n	Equivalent input noise voltage	R_S = 20 Ω, See Figure 3	f = 10 Hz	25°C		48	85‡		48	85‡	nV/√Hz
			f = 10 kHz			12	17‡		12	17‡	
$V_{N(PP)}$	Peak-to-peak equivalent input noise voltage		f = 10 Hz to 10 kHz	25°C		6			6		µV
			f = 0.1 Hz to 10 Hz			0.6			0.6		
I_n	Equivalent input noise current	V_{IC} = 0,	f = 10 kHz	25°C		2.8			2.8		fA/√Hz
THD + N	Total harmonic distortion plus noise	$V_{O(PP)}$ = 20 V, f = 1 kHz, R_S = 25 Ω	A_{VD} = 10, R_L = 2 kΩ,	25°C		0.008%			0.008%		
B_1	Unity-gain bandwidth	V_I = 10 mV, C_L = 25 pF,	R_L = 2 kΩ, See Figure 2	25°C	8‡	10		8‡	10		MHz
B_{OM}	Maximum output-swing bandwidth	$V_{O(PP)}$ = 20 V, R_L = 2 kΩ,	A_{VD} = −1, C_L = 25 pF	25°C	478‡	637		478‡	637		kHz
ϕ_m	Phase margin at unity gain	V_I = 10 mV, C_L = 25 pF,	R_L = 2 kΩ, See Figure 2	25°C		57°			57°		

† Full range is −55°C to 125°C.
‡ On products compliant to MIL-PRF-38535, Class B, this parameter is not production tested.

TLE2074Y electrical characteristics at $V_{CC\pm}$ = ±15 V, T_A = 25°C (unless otherwise noted)

PARAMETER			TEST CONDITIONS		TLE2074Y MIN	TLE2074Y TYP	TLE2074Y MAX	UNIT
V_{IO}	Input offset voltage		V_{IC} = 0, V_O = 0, R_S = 50 Ω				5	mV
I_{IO}	Input offset current		V_{IC} = 0, V_O = 0, See Figure 4			15	100	pA
I_{IB}	Input bias current					25	175	pA
V_{ICR}	Common-mode input voltage range		R_S = 50 Ω		15 to −11	15 to 11.9		V
V_{OM+}	Maximum positive peak output voltage swing		I_O = −200 μA		13.8	14.1		V
			I_O = −2 mA		13.5	13.9		
			I_O = −20 mA		11.5	12.3		
V_{OM-}	Maximum negative peak output voltage swing		I_O = 200 μA		−13.8	−14.2		V
			I_O = 2 mA		−13.5	−14		
			I_O = 20 mA		−11.5	−12.4		
A_{VD}	Large-signal differential voltage amplification		V_O = ±10 V	R_L = 600 Ω	80	96		dB
				R_L = 2 kΩ	90	109		
				R_L = 10 kΩ	95	118		
r_i	Input resistance		V_{IC} = 0			10^{12}		Ω
c_i	Input capacitance	Common mode	V_O = 0, See Figure 5			7.5		pF
		Differential				2.5		
z_o	Open-loop output impedance		f = 1 MHz			80		Ω
CMRR	Common-mode rejection ratio		V_{IC} = V_{ICR}min, V_O = 0, R_S = 50 Ω		80	98		dB
k_{SVR}	Supply-voltage rejection ratio ($\Delta V_{CC\pm}/\Delta V_{IO}$)		$V_{CC\pm}$ = ±5 V to ±15 V, V_O = 0, R_S = 50 Ω		82	99		dB
I_{CC}	Supply current (four amplifiers)		V_O = 0, No load		5.2	6.5	7.5	mA
I_{OS}	Short-circuit output current		V_O = 0	V_{ID} = 1 V	−30	−45		mA
				V_{ID} = −1 V	30	48		

PARAMETER MEASUREMENT INFORMATION

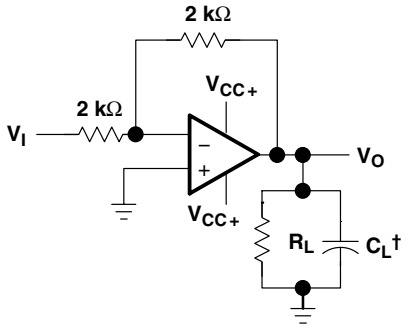

† Includes fixture capacitance

Figure 1. Slew-Rate Test Circuit

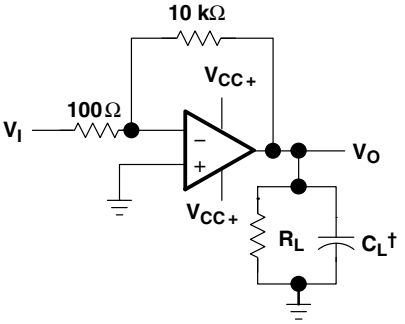

† Includes fixture capacitance

Figure 2. Unity-Gain Bandwidth and Phase-Margin Test Circuit

PARAMETER MEASUREMENT INFORMATION

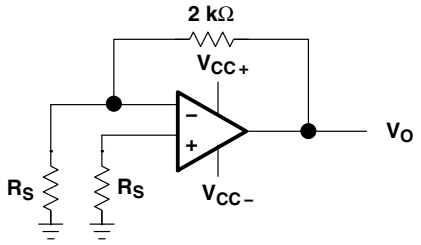

Figure 3. Noise-Voltage Test Circuit

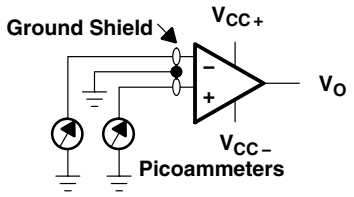

Figure 4. Input-Bias and Offset-Current Test Circuit

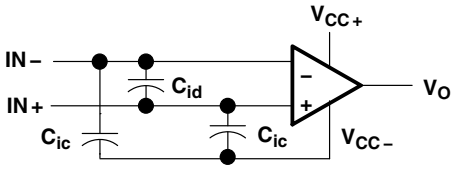

Figure 5. Internal Input Capacitance

typical values

Typical values presented in this data sheet represent the median (50% point) of device parametric performance.

input bias and offset current

At the picoampere bias current level typical of the TLE207x and TLE207xA, accurate measurement of the bias current becomes difficult. Not only does this measurement require a picoammeter but test socket leakages can easily exceed the actual device bias currents. To accurately measure these small currents, Texas Instruments uses a two-step process. The socket leakage is measured using picoammeters with bias voltages applied but with no device in the socket. The device is then inserted in the socket and a second test is performed that measures both the socket leakage and the device input bias current. The two measurements are then subtracted algebraically to determine the bias current of the device.

TYPICAL CHARACTERISTICS

Table of Graphs

			FIGURE
V_{IO}	Input offset voltage	Distribution	6, 7, 8
α_{VIO}	Temperature coefficient of input offset voltage	Distribution	9, 10, 11
I_{IO}	Input offset current	vs Free-air temperature	12, 13
I_{IB}	Input bias current	vs Free-air temperature vs Total supply voltage	12, 13 14
V_{ICR}	Common-mode input voltage range	vs Free-air temperature	15
V_O	Output voltage	vs Differential input voltage	16, 17
V_{OM+}	Maximum positive peak output voltage	vs Output current	18
V_{OM-}	Maximum negative peak output voltage	vs Output current	19
V_{OM}	Maximum peak output voltage	vs Free-air temperature vs Supply voltage	20, 21 22
$V_{O(PP)}$	Maximum peak-to-peak output voltage	vs Frequency	23
V_O	Output voltage	vs Settling time	24
A_{VD}	Large-signal differential voltage amplification	vs Load resistance vs Free-air temperature	25 26, 27
A_{VD}	Small-signal differential voltage amplification	vs Frequency	28, 29
CMRR	Common-mode rejection ratio	vs Frequency vs Free-air temperature	30 31
k_{SVR}	Supply-voltage rejection ratio	vs Frequency vs Free-air temperature	32 33
I_{CC}	Supply current	vs Supply voltage vs Free-air temperature vs Differential input voltage	34, 35, 36 37, 38, 39 40 – 45
I_{OS}	Short-circuit output current	vs Supply voltage vs Elapsed time vs Free-air temperature	46 47 48
SR	Slew rate	vs Free-air temperature vs Load resistance vs Differential input voltage	49, 50 51 52
V_n	Equivalent Input noise voltage (spectral density)	vs Frequency	53
V_n	Input referred noise voltage	vs Noise bandwidth Over a 10-second time interval	54 55
	Third-octave spectral noise density	vs Frequency bands	56
THD + N	Total harmonic distortion plus noise	vs Frequency	57, 58
B_1	Unity-gain bandwidth	vs Load capacitance	59
	Gain-bandwidth product	vs Free-air temperature vs Supply voltage	60 61
	Gain margin	vs Load capacitance	62
ϕ_m	Phase margin	vs Free-air temperature vs Supply voltage vs Load capacitance	63 64 65
	Phase shift	vs Frequency	28, 29
	Noninverting large-signal pulse response	vs Time	66
	Small-signal pulse response	vs Time	67
z_o	Closed-loop output impedance	vs Frequency	68
	Crosstalk attenuation	vs Frequency	69

TYPICAL CHARACTERISTICS

DISTRIBUTION OF TLE2071 INPUT OFFSET VOLTAGE

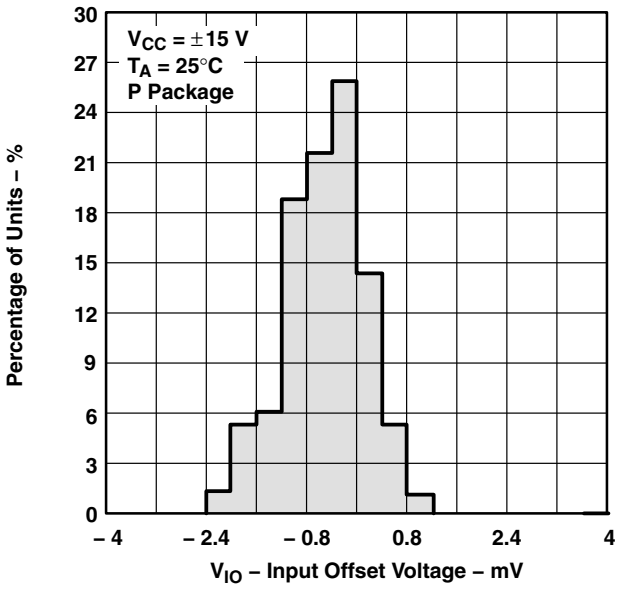

Figure 6

DISTRIBUTION OF TLE2072 INPUT OFFSET VOLTAGE

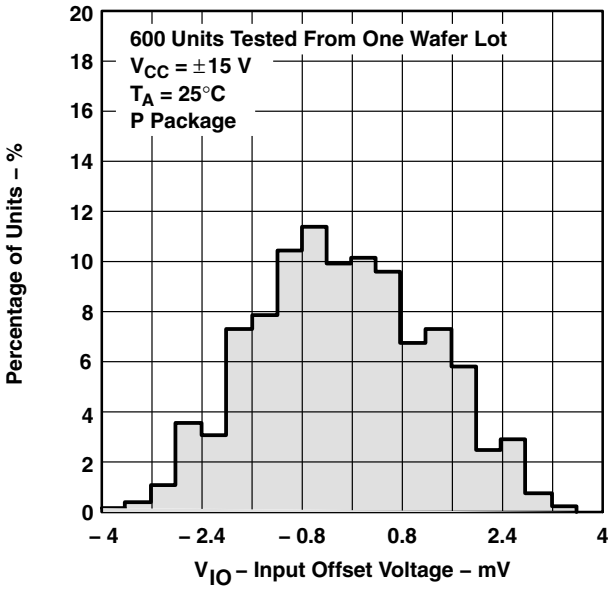

Figure 7

DISTRIBUTION OF TLE2074 INPUT OFFSET VOLTAGE

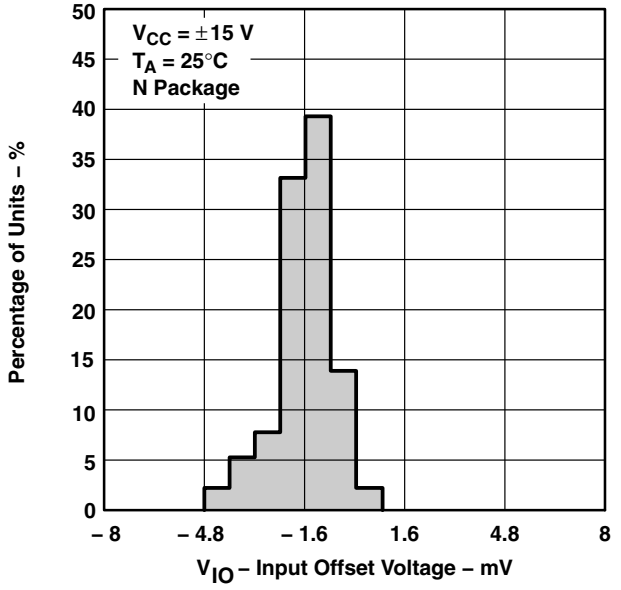

Figure 8

DISTRIBUTION OF TLE2071 INPUT OFFSET VOLTAGE TEMPERATURE COEFFICIENT

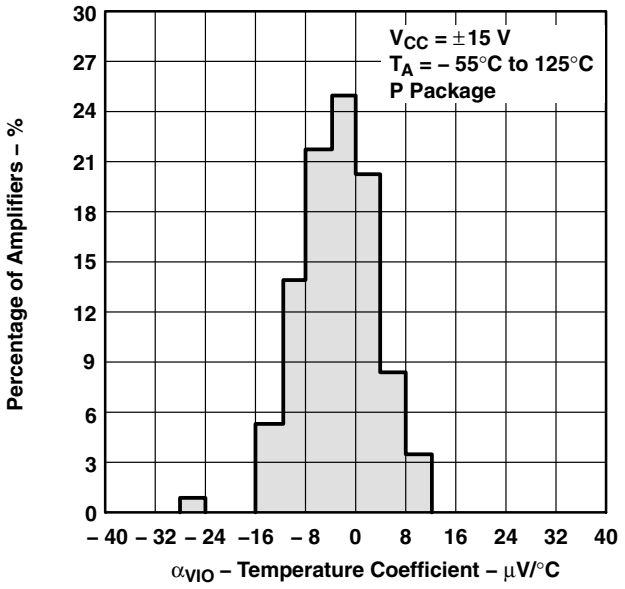

Figure 9

TYPICAL CHARACTERISTICS

DISTRIBUTION OF TLE2072 INPUT OFFSET VOLTAGE TEMPERATURE COEFFICIENT

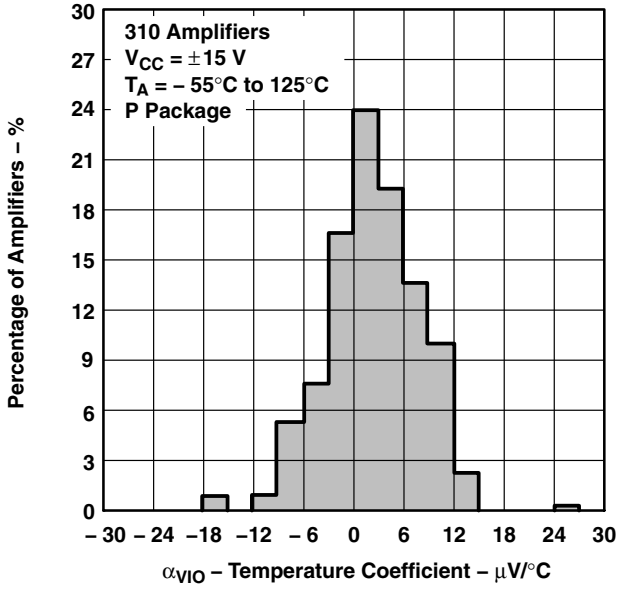

Figure 10

DISTRIBUTION OF TLE2074 INPUT OFFSET VOLTAGE TEMPERATURE COEFFICIENT

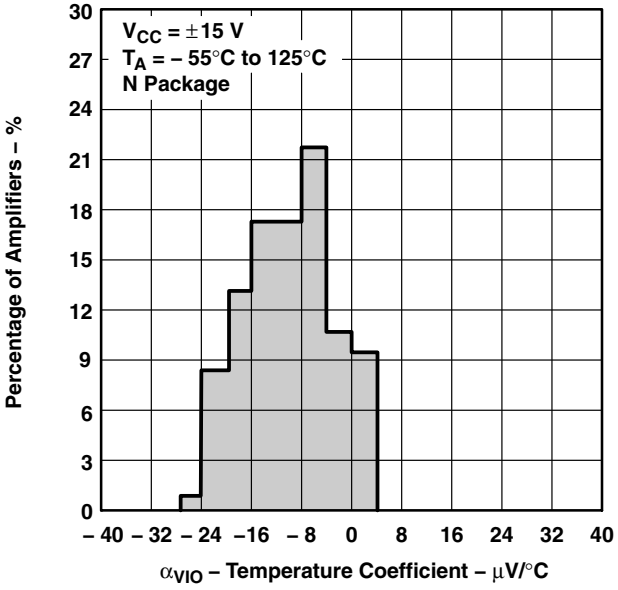

Figure 11

INPUT BIAS CURRENT AND INPUT OFFSET CURRENT† vs FREE-AIR TEMPERATURE

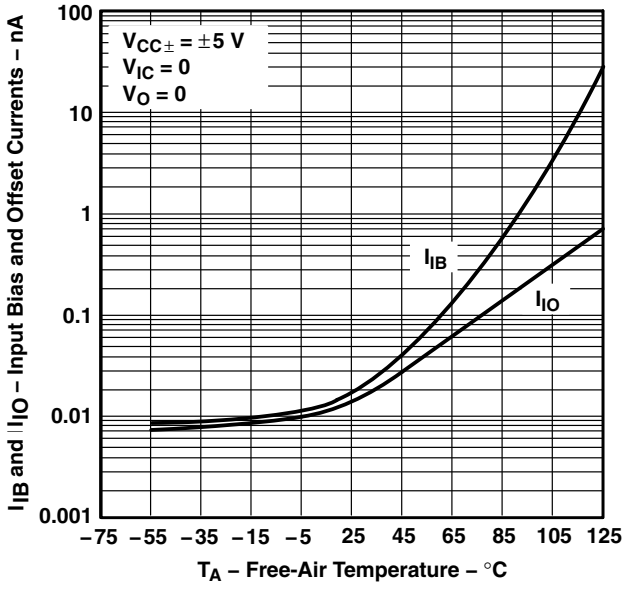

Figure 12

INPUT BIAS CURRENT AND INPUT OFFSET CURRENT† vs FREE-AIR TEMPERATURE

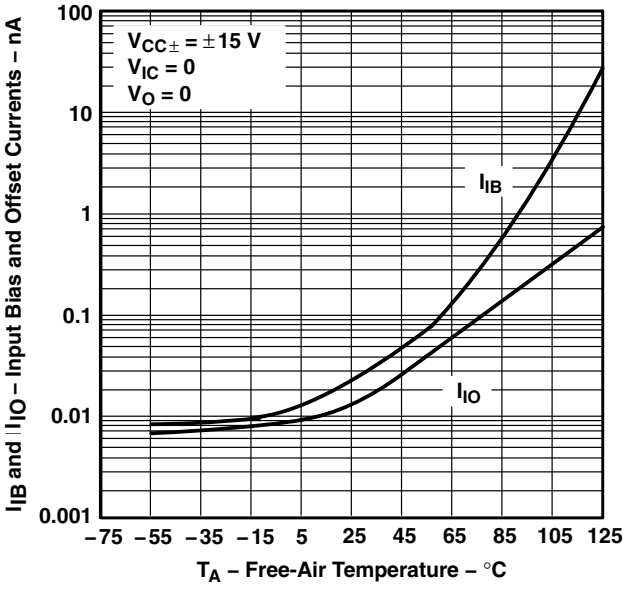

Figure 13

† Data at high and low temperatures are applicable only within the rated operating free-air temperature ranges of the various devices.

TYPICAL CHARACTERISTICS

INPUT BIAS CURRENT vs TOTAL SUPPLY VOLTAGE

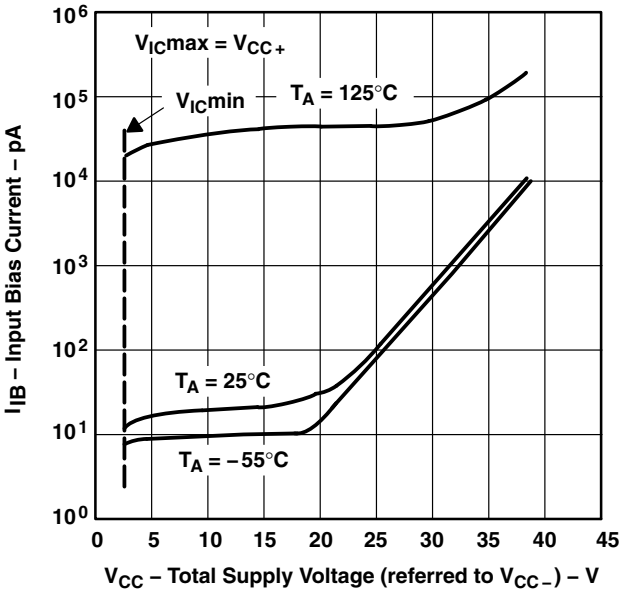

Figure 14

COMMON-MODE INPUT VOLTAGE RANGE† vs FREE-AIR TEMPERATURE

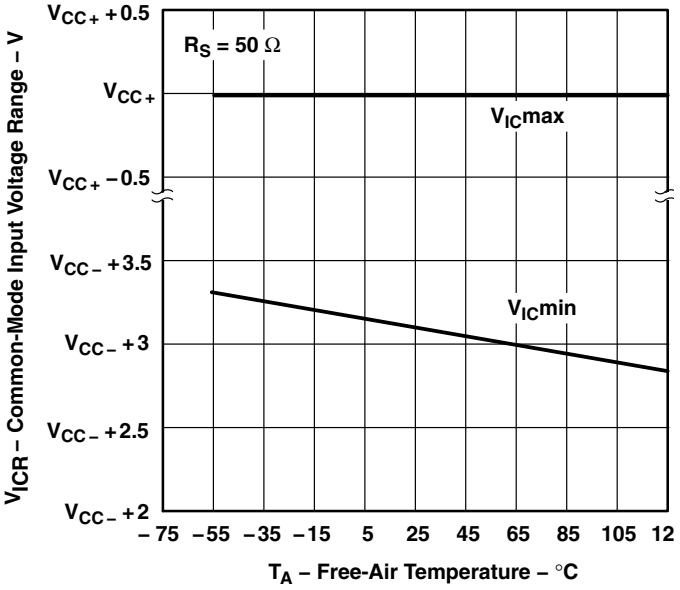

Figure 15

OUTPUT VOLTAGE vs DIFFERENTIAL INPUT VOLTAGE

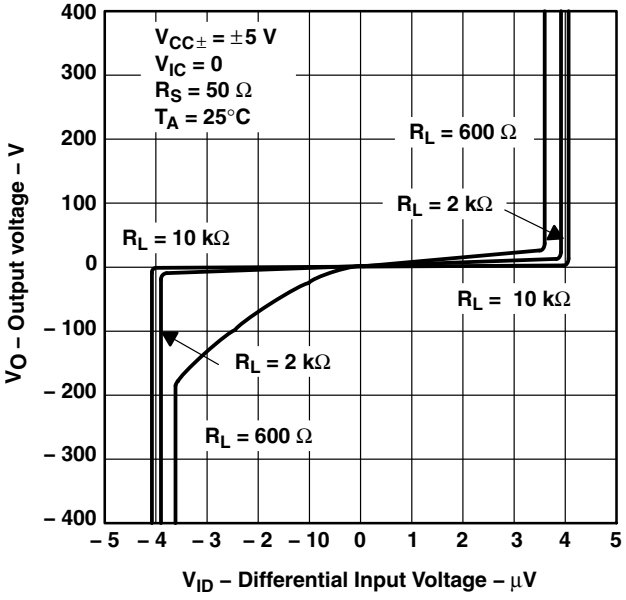

Figure 16

OUTPUT VOLTAGE vs DIFFERENTIAL INPUT VOLTAGE

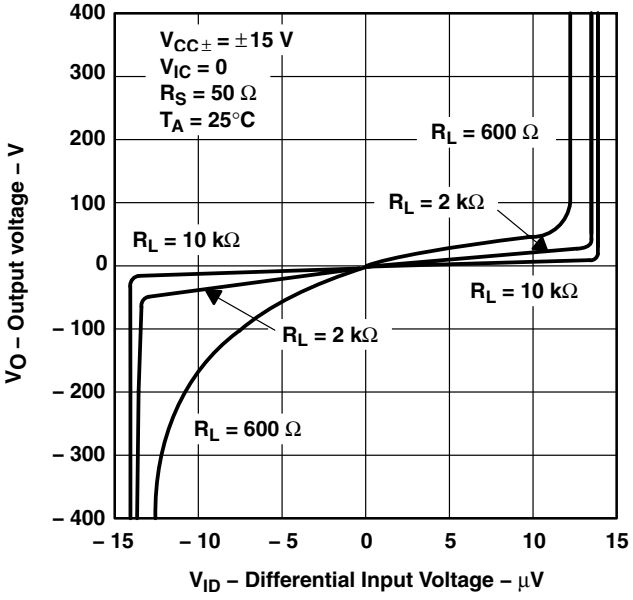

Figure 17

† Data at high and low temperatures are applicable only within the rated operating free-air temperature ranges of the various devices.

TYPICAL CHARACTERISTICS

MAXIMUM POSITIVE PEAK OUTPUT VOLTAGE† vs OUTPUT CURRENT

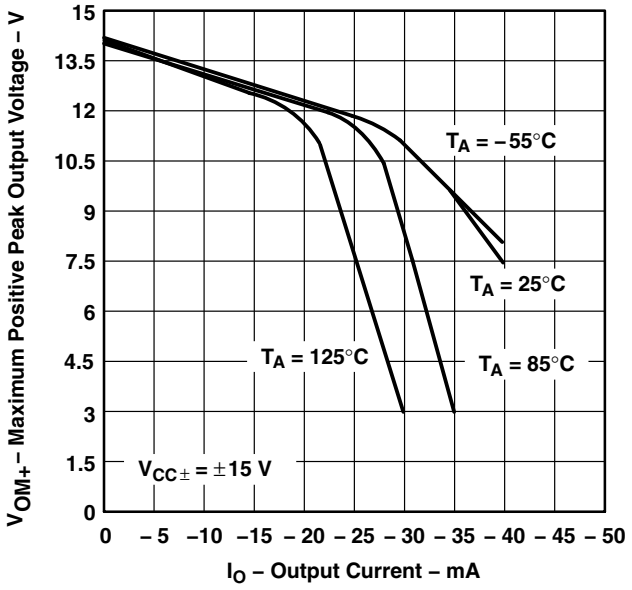

Figure 18

MAXIMUM NEGATIVE PEAK OUTPUT VOLTAGE† vs OUTPUT CURRENT

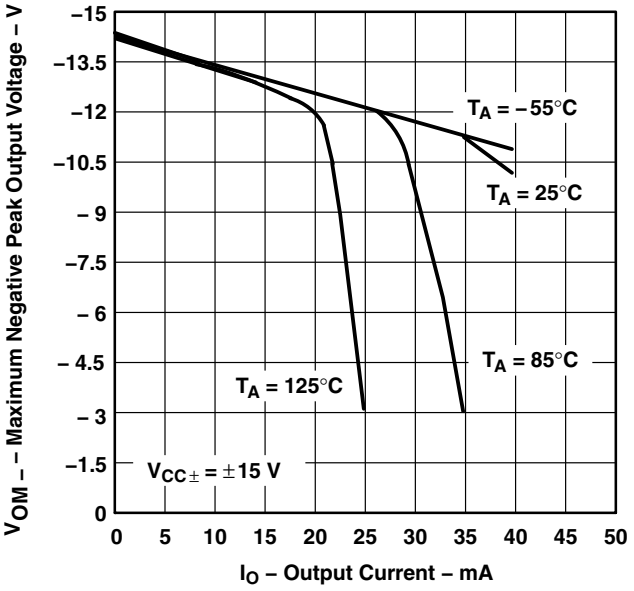

Figure 19

MAXIMUM PEAK OUTPUT VOLTAGE† vs FREE-AIR TEMPERATURE

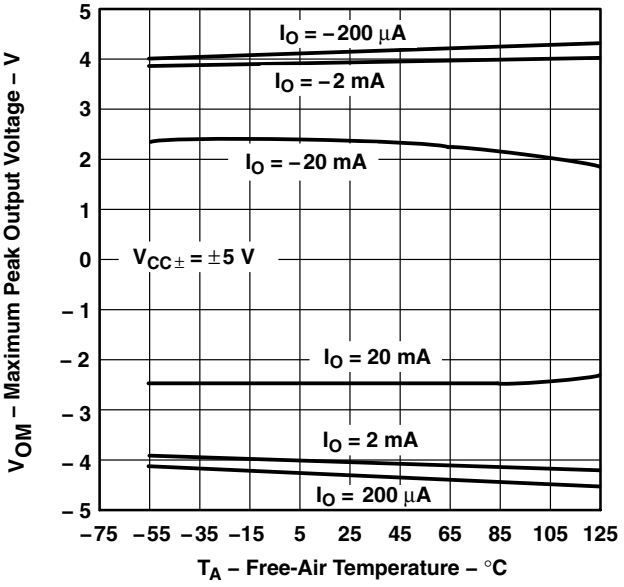

Figure 20

MAXIMUM PEAK OUTPUT VOLTAGE† vs FREE-AIR TEMPERATURE

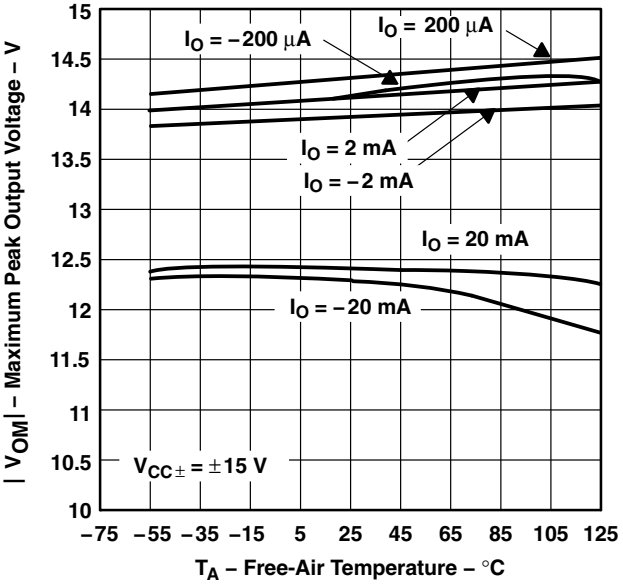

Figure 21

† Data at high and low temperatures are applicable only within the rated operating free-air temperature ranges of the various devices.

TYPICAL CHARACTERISTICS

MAXIMUM PEAK OUTPUT VOLTAGE vs SUPPLY VOLTAGE

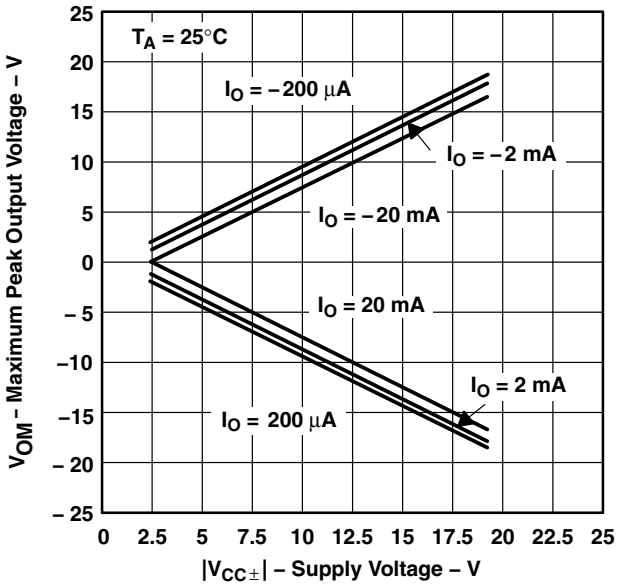

Figure 22

MAXIMUM PEAK-TO-PEAK OUTPUT VOLTAGE† vs FREQUENCY

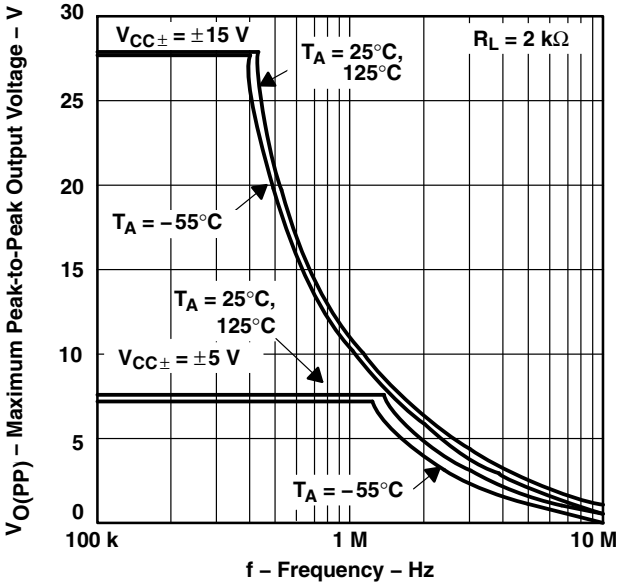

Figure 23

OUTPUT VOLTAGE vs SETTLING TIME

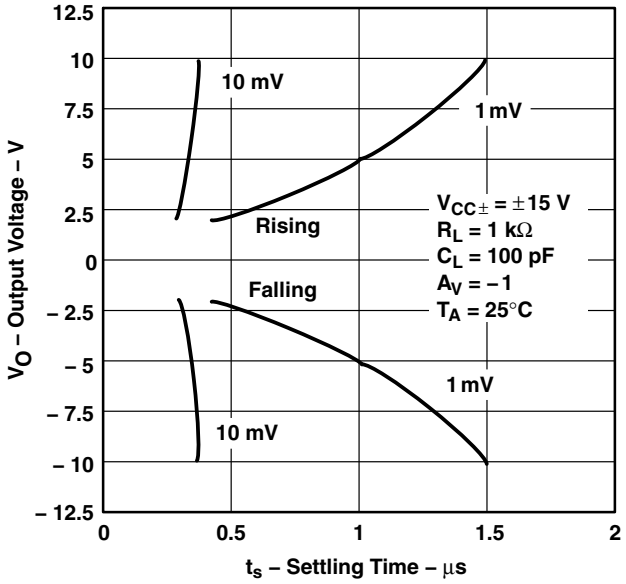

Figure 24

LARGE-SIGNAL DIFFERENTIAL VOLTAGE AMPLIFICATION vs LOAD RESISTANCE

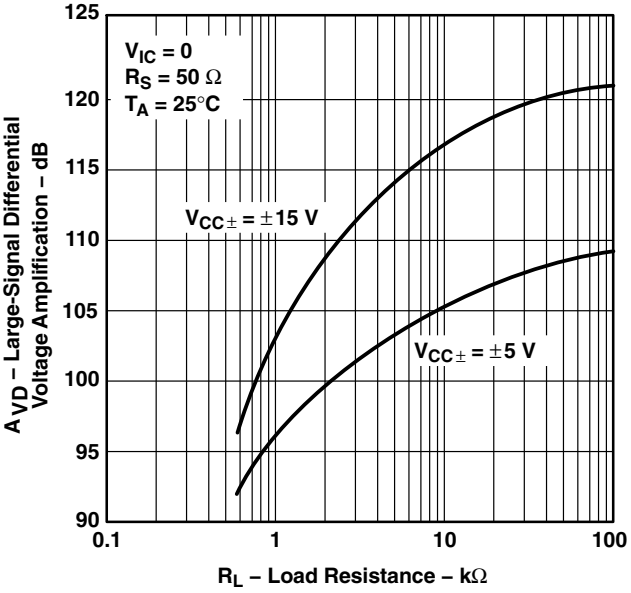

Figure 25

† Data at high and low temperatures are applicable only within the rated operating free-air temperature ranges of the various devices.

TYPICAL CHARACTERISTICS

LARGE-SIGNAL DIFFERENTIAL VOLTAGE AMPLIFICATION† vs FREE-AIR TEMPERATURE

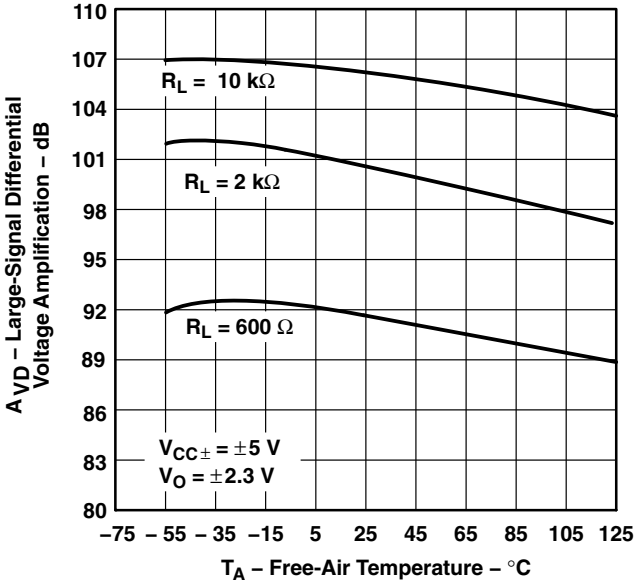

Figure 26

LARGE-SIGNAL DIFFERENTIAL VOLTAGE AMPLIFICATION† vs FREE-AIR TEMPERATURE

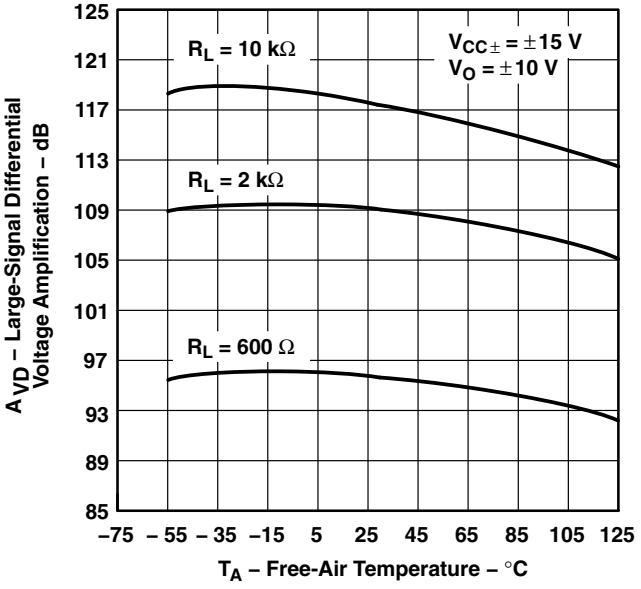

Figure 27

† Data at high and low temperatures are applicable only within the rated operating free-air temperature ranges of the various devices.

TYPICAL CHARACTERISTICS

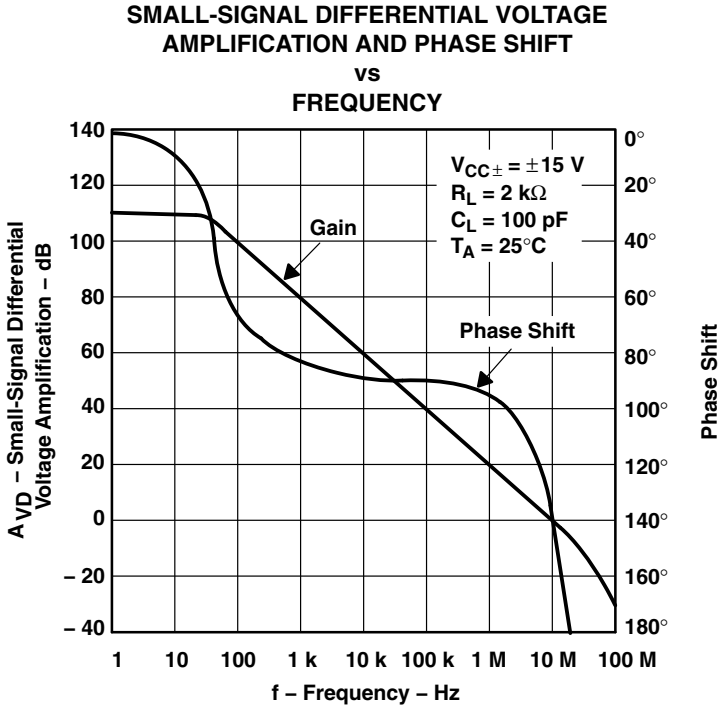

Figure 28

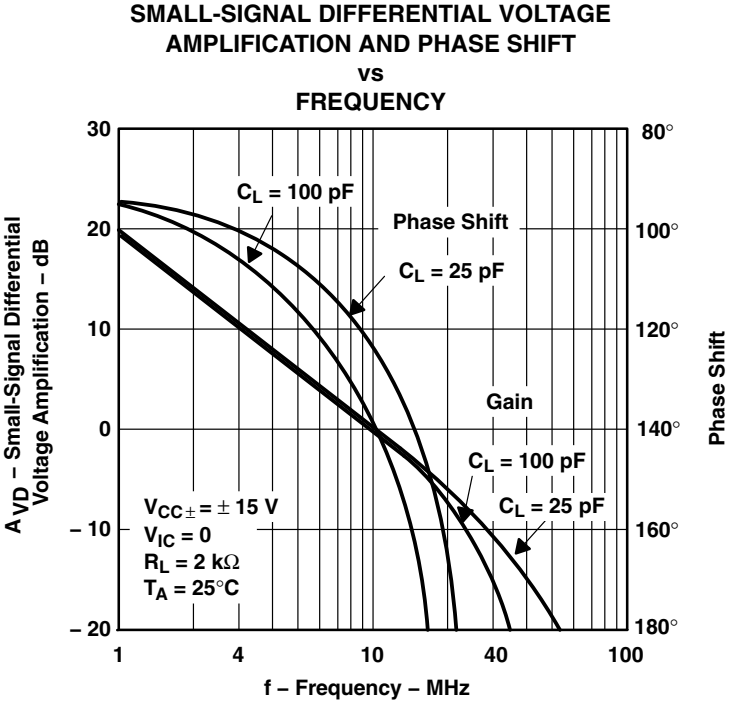

Figure 29

TYPICAL CHARACTERISTICS

COMMON-MODE REJECTION RATIO vs FREQUENCY

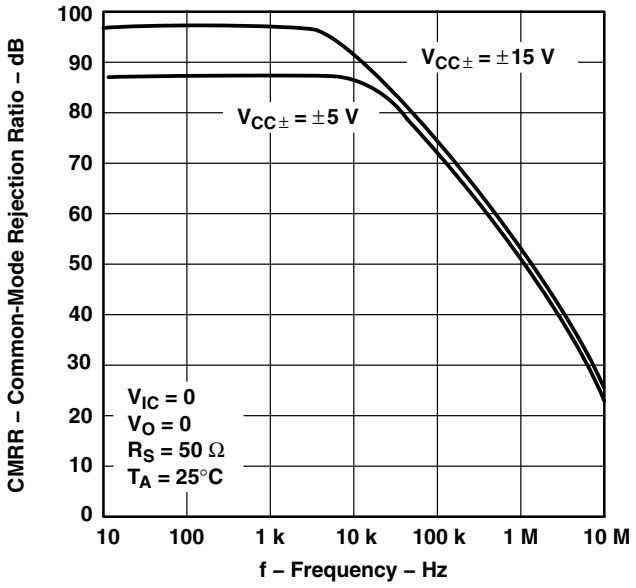

Figure 30

COMMON-MODE REJECTION RATIO† vs FREE-AIR TEMPERATURE

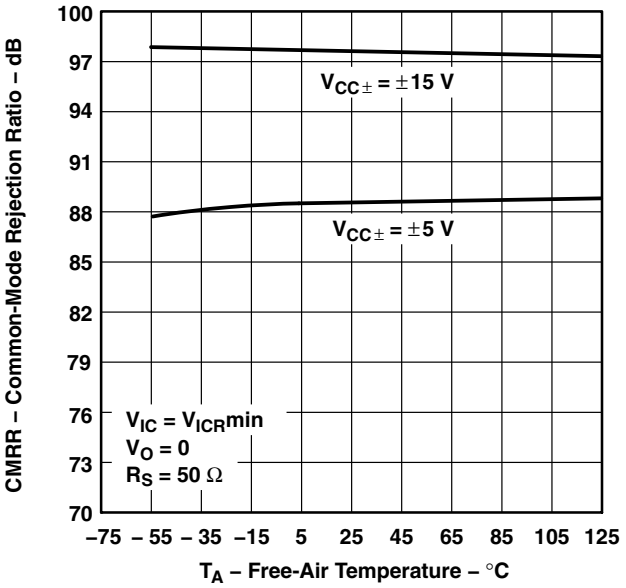

Figure 31

SUPPLY-VOLTAGE REJECTION RATIO vs FREQUENCY

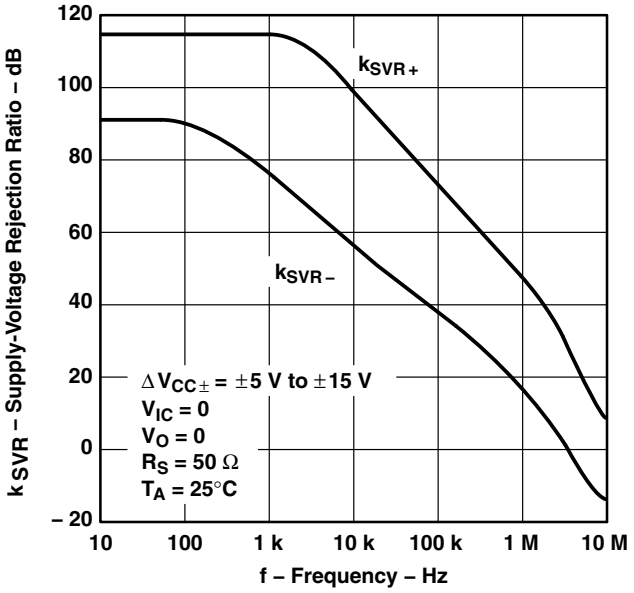

Figure 32

SUPPLY-VOLTAGE REJECTION RATIO† vs FREE-AIR TEMPERATURE

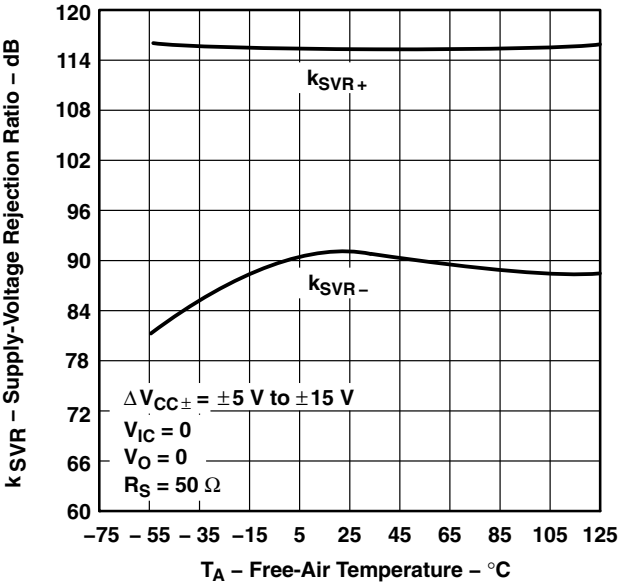

Figure 33

† Data at high and low temperatures are applicable only within the rated operating free-air temperature ranges of the various devices.

TYPICAL CHARACTERISTICS

TLE2071
SUPPLY CURRENT
vs
SUPPLY VOLTAGE

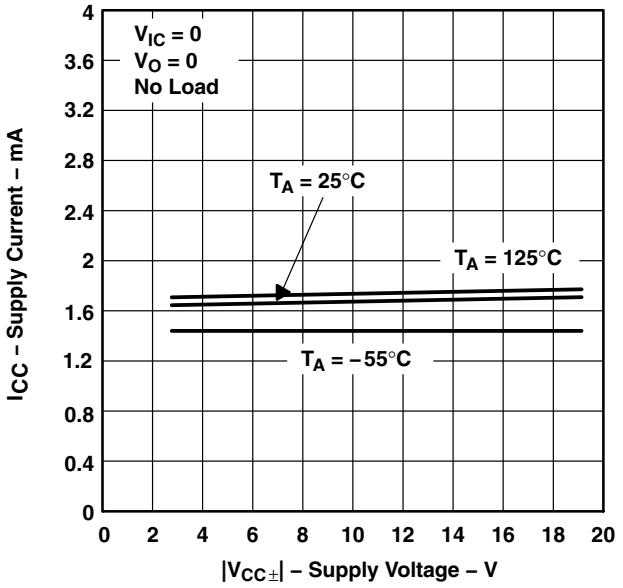

Figure 34

TLE2072
SUPPLY CURRENT
vs
SUPPLY VOLTAGE

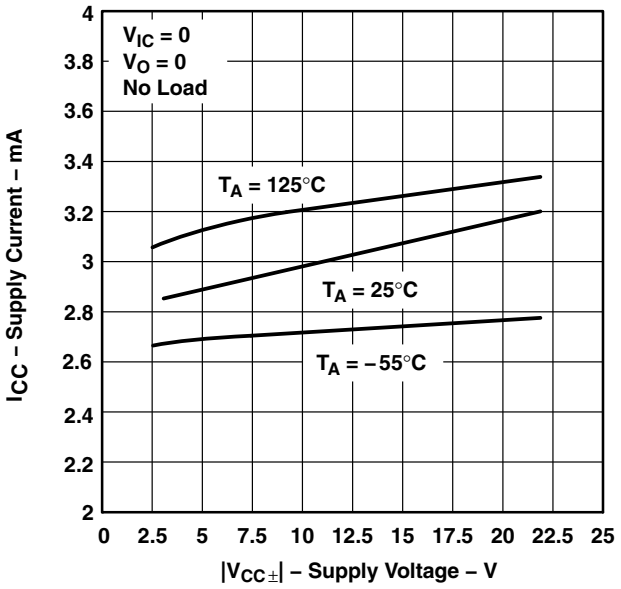

Figure 35

TLE2074
SUPPLY CURRENT
vs
SUPPLY VOLTAGE

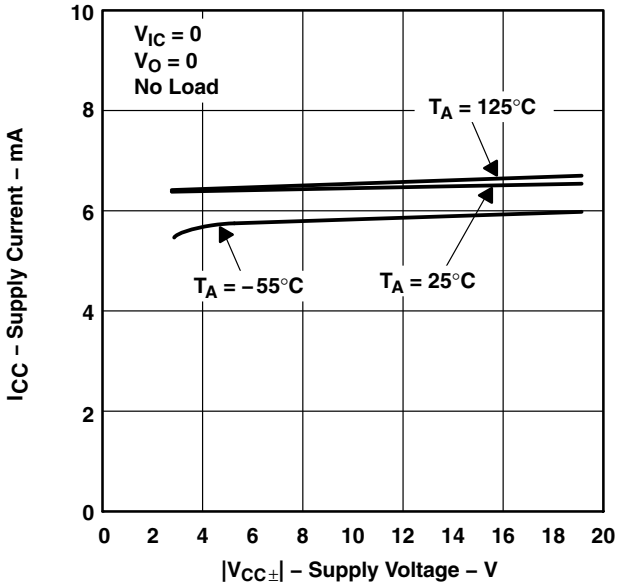

Figure 36

TLE2071
SUPPLY CURRENT†
vs
FREE-AIR TEMPERATURE

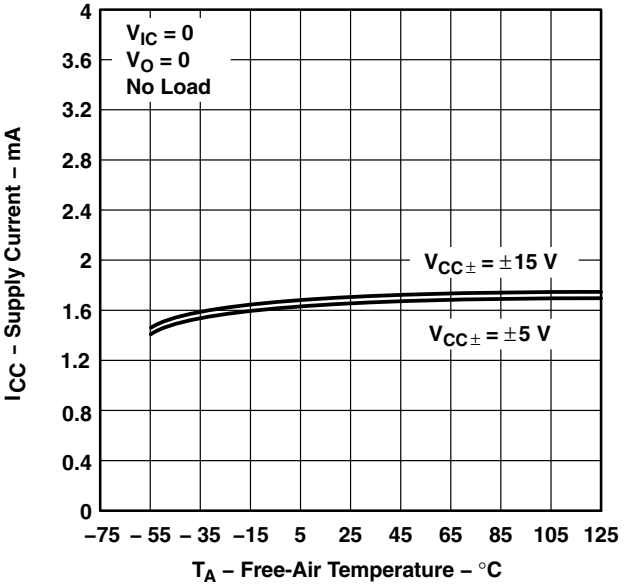

Figure 37

† Data at high and low temperatures are applicable only within the rated operating free-air temperature ranges of the various devices.

TYPICAL CHARACTERISTICS

TLE2072
SUPPLY CURRENT†
vs
FREE-AIR TEMPERATURE

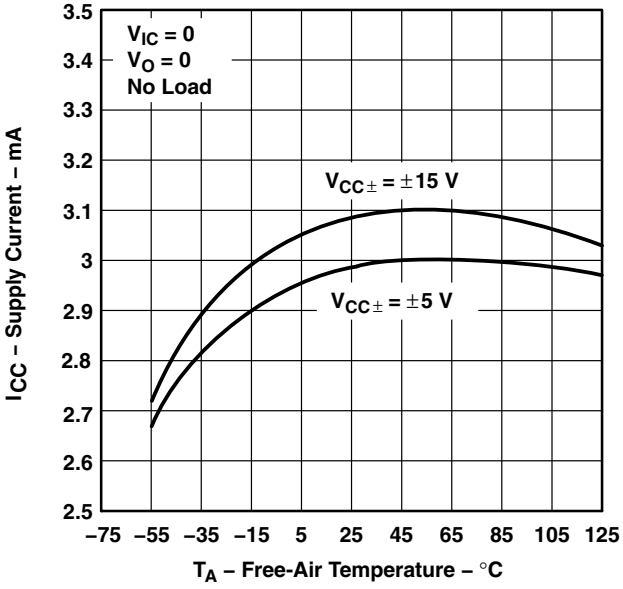

Figure 38

TLE2074
SUPPLY CURRENT†
vs
FREE-AIR TEMPERATURE

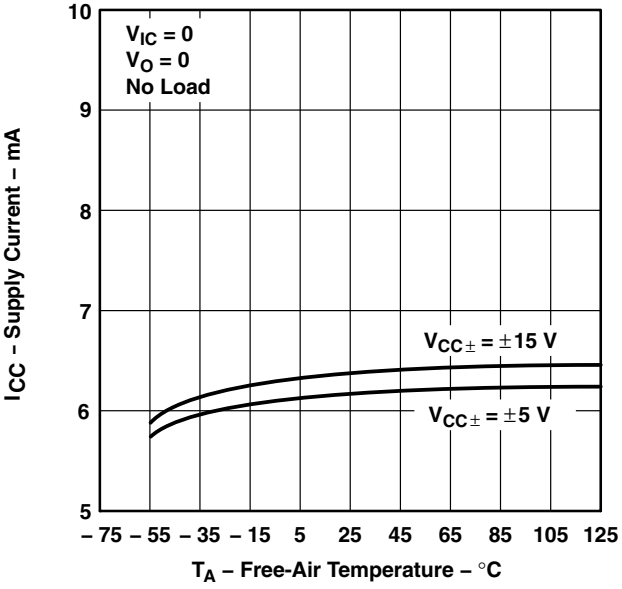

Figure 39

TLE2071
SUPPLY CURRENT
vs
DIFFERENTIAL INPUT VOLTAGE

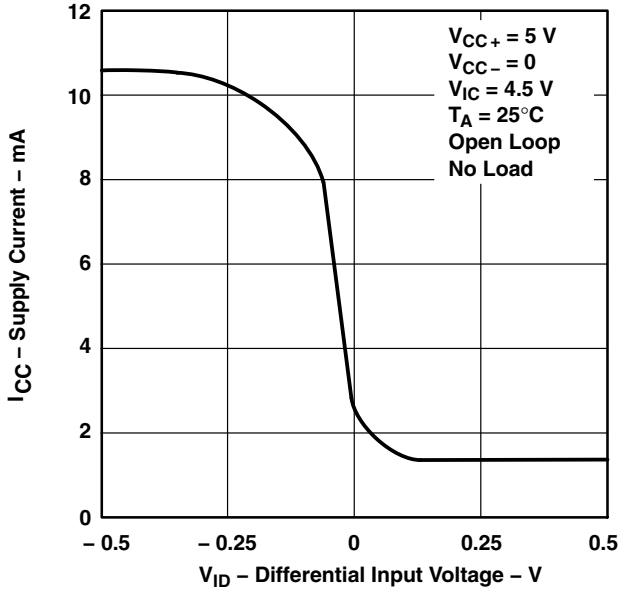

Figure 40

TLE2072
SUPPLY CURRENT
vs
DIFFERENTIAL INPUT VOLTAGE

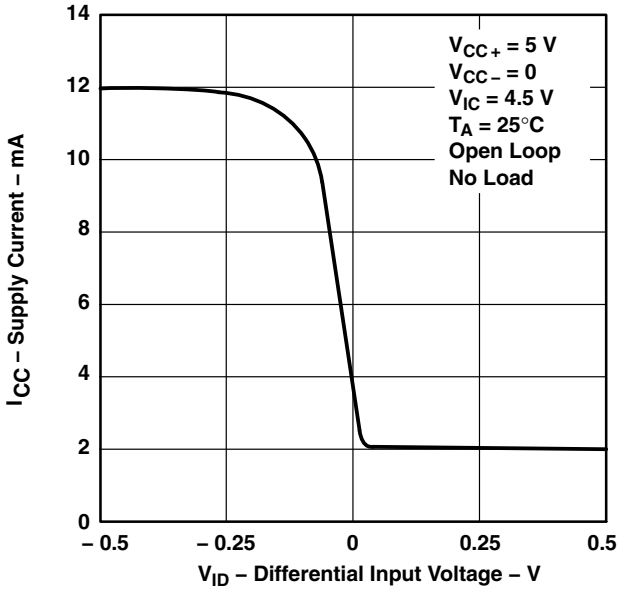

Figure 41

† Data at high and low temperatures are applicable only within the rated operating free-air temperature ranges of the various devices.

TYPICAL CHARACTERISTICS

TLE2074
SUPPLY CURRENT
vs
DIFFERENTIAL INPUT VOLTAGE

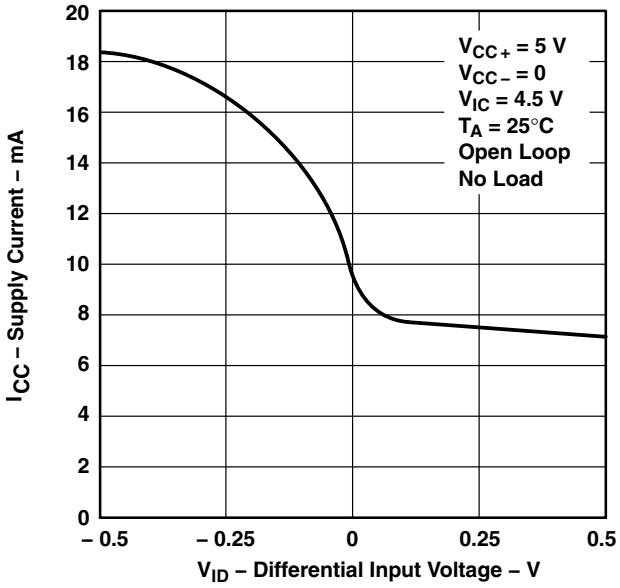

Figure 42

TLE2071
SUPPLY CURRENT
vs
DIFFERENTIAL INPUT VOLTAGE

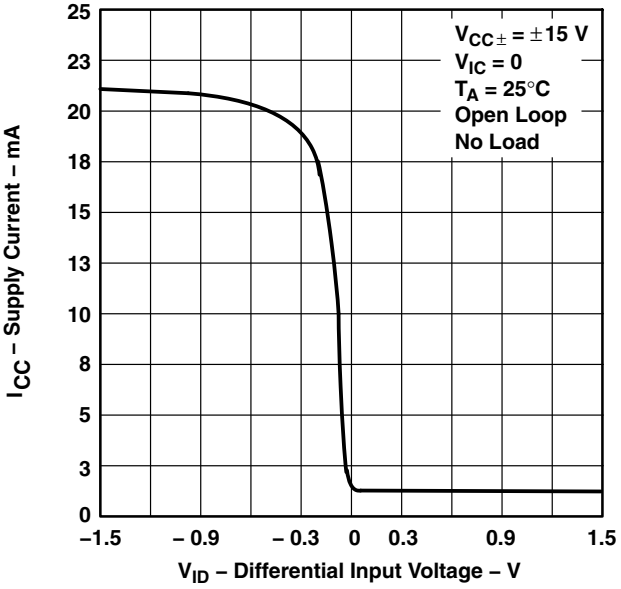

Figure 43

TLE2072
SUPPLY CURRENT
vs
DIFFERENTIAL INPUT VOLTAGE

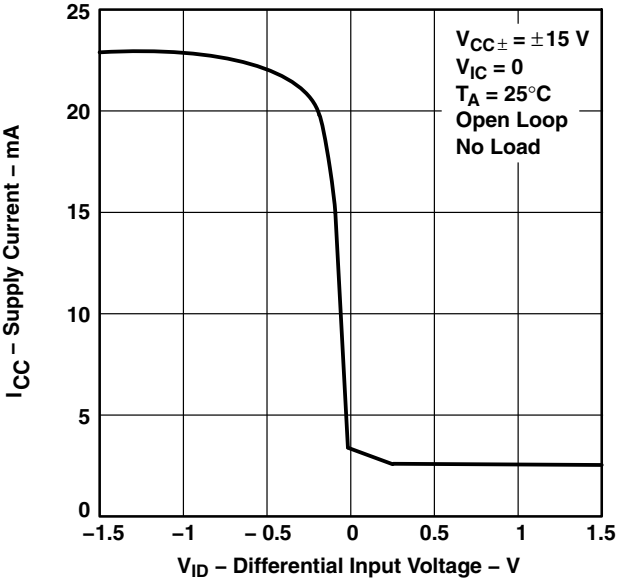

Figure 44

TLE2074
SUPPLY CURRENT
vs
DIFFERENTIAL INPUT VOLTAGE

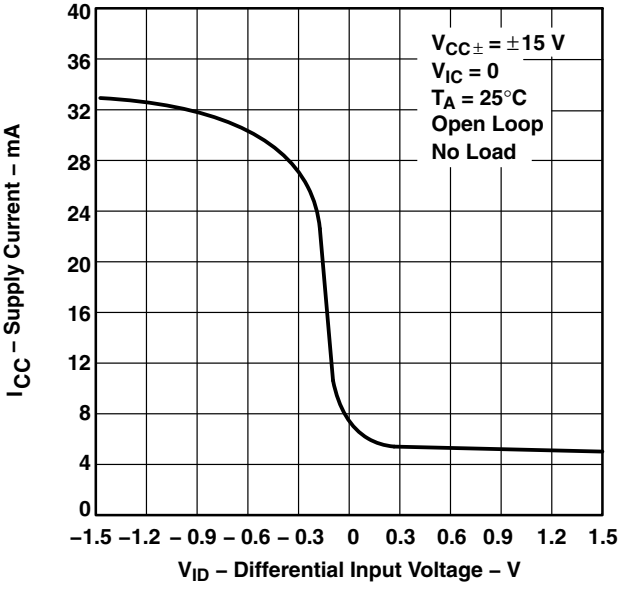

Figure 45

TYPICAL CHARACTERISTICS

SHORT-CIRCUIT OUTPUT CURRENT vs SUPPLY VOLTAGE

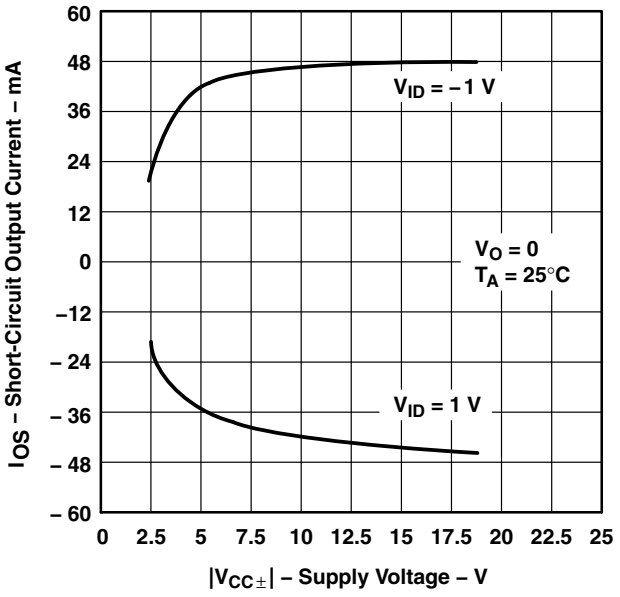

Figure 46

SHORT-CIRCUIT OUTPUT CURRENT vs ELAPSED TIME

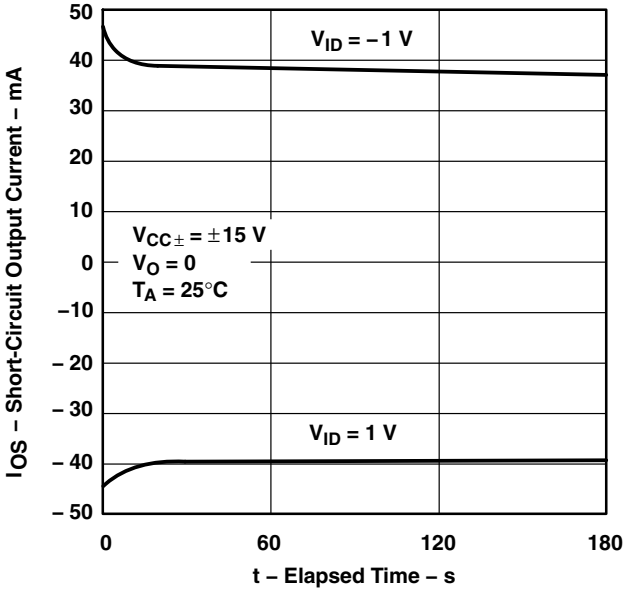

Figure 47

SHORT-CIRCUIT OUTPUT CURRENT† vs FREE-AIR TEMPERATURE

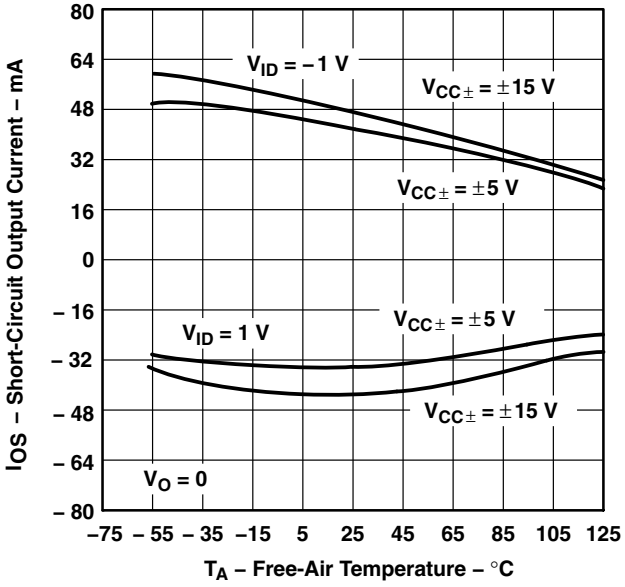

Figure 48

SLEW RATE† vs FREE-AIR TEMPERATURE

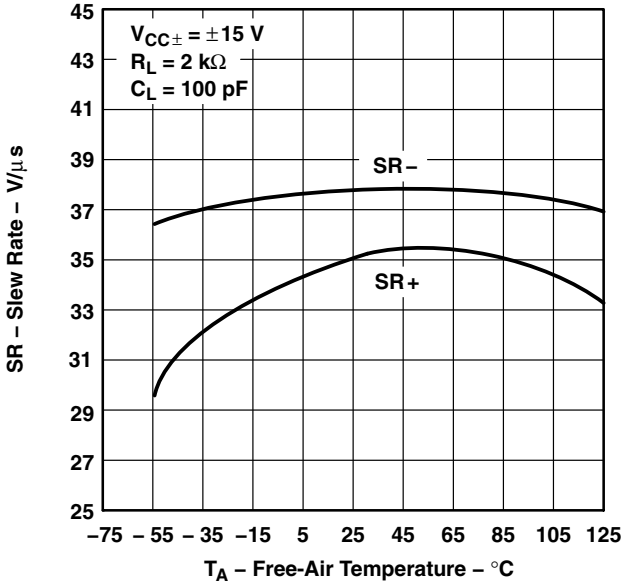

Figure 49

† Data at high and low temperatures are applicable only within the rated operating free-air temperature ranges of the various devices.

TYPICAL CHARACTERISTICS

SLEW RATE† vs FREE-AIR TEMPERATURE

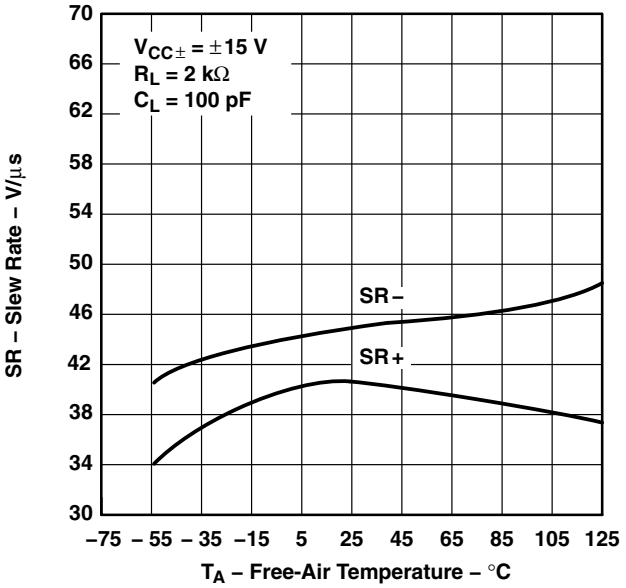

Figure 50

SLEW RATE vs LOAD RESISTANCE

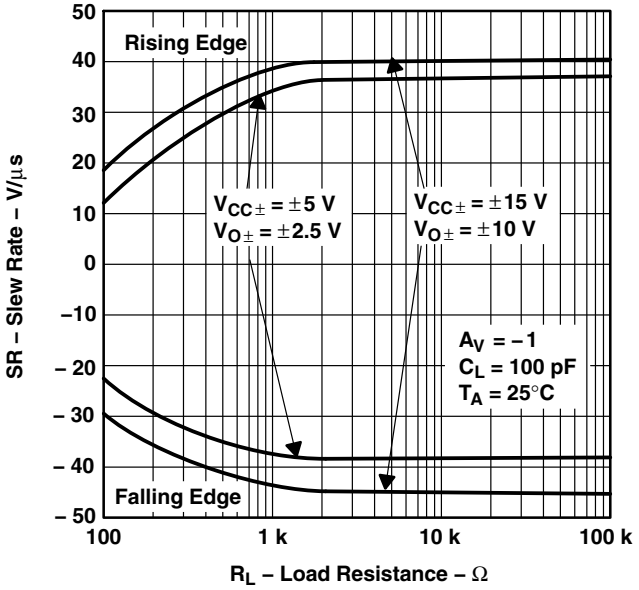

Figure 51

SLEW RATE vs DIFFERENTIAL INPUT VOLTAGE

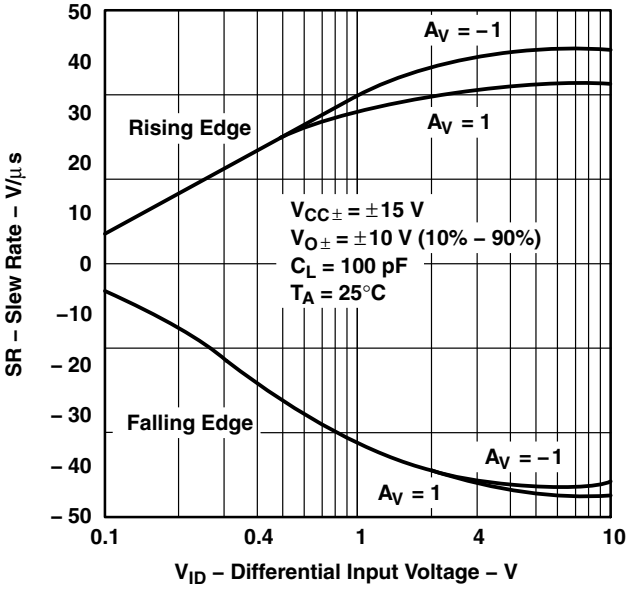

Figure 52

EQUIVALENT INPUT NOISE VOLTAGE (SPECTRAL DENSITY) vs FREQUENCY

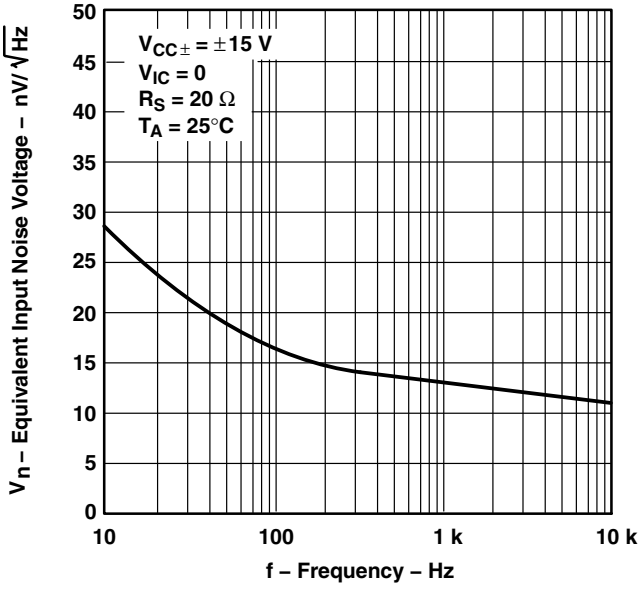

Figure 53

† Data at high and low temperatures are applicable only within the rated operating free-air temperature ranges of the various devices.

TYPICAL CHARACTERISTICS

INPUT-REFERRED NOISE VOLTAGE vs NOISE BANDWIDTH

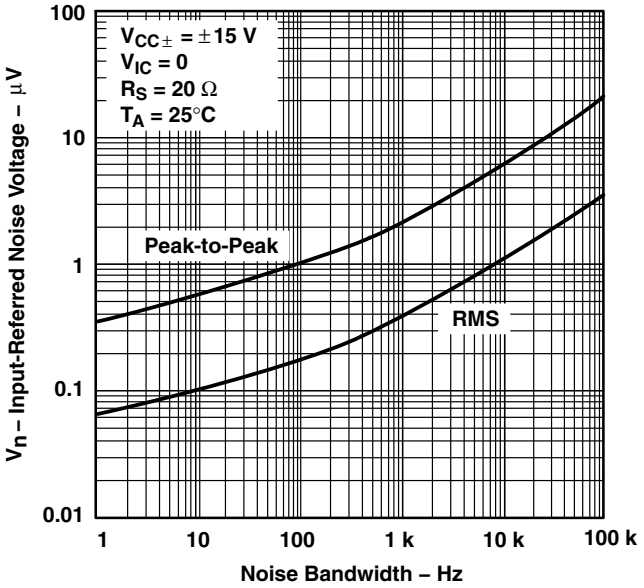

Figure 54

INPUT-REFERRED NOISE VOLTAGE OVER A 10-SECOND TIME INTERVAL

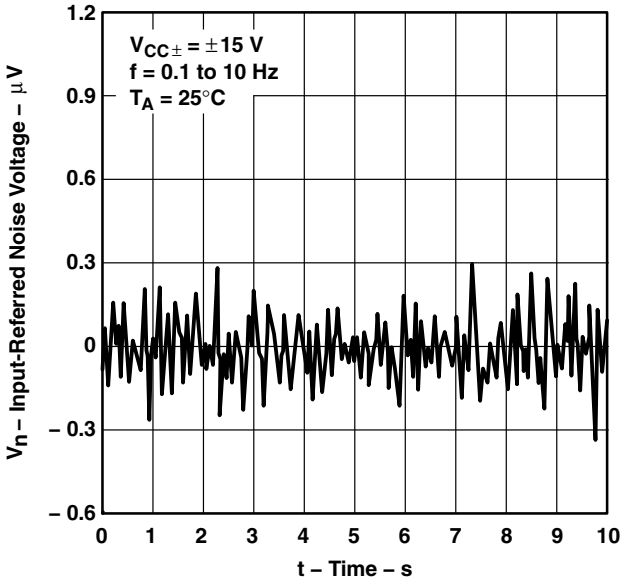

Figure 55

THIRD-OCTAVE SPECTRAL NOISE DENSITY vs FREQUENCY BANDS

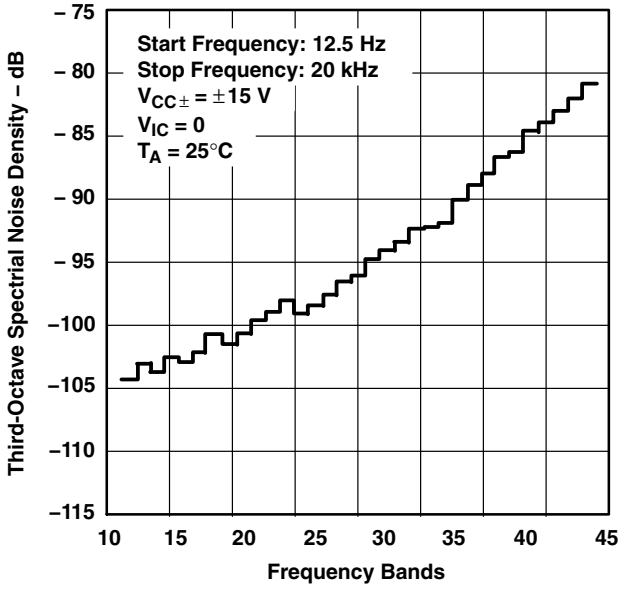

Figure 56

TOTAL HARMONIC DISTORTION PLUS NOISE vs FREQUENCY

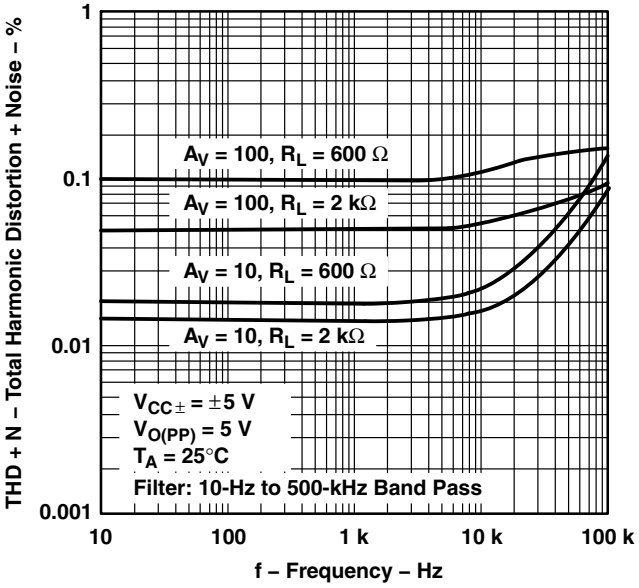

Figure 57

TYPICAL CHARACTERISTICS

TOTAL HARMONIC DISTORTION PLUS NOISE vs FREQUENCY

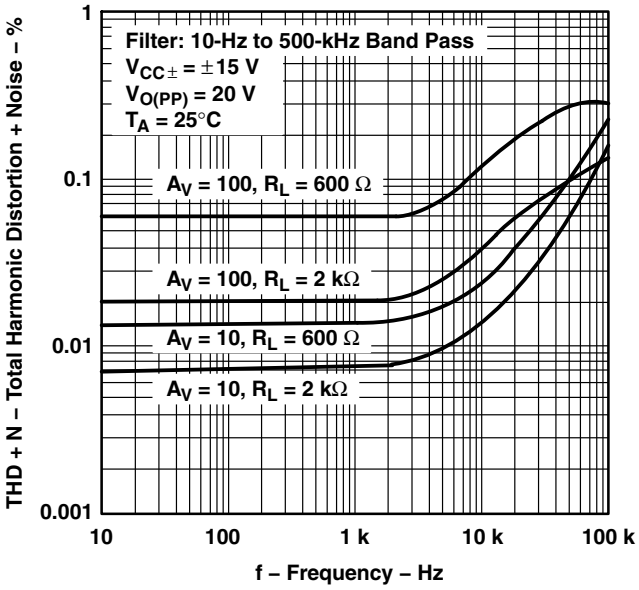

Figure 58

UNITY-GAIN BANDWIDTH vs LOAD CAPACITANCE

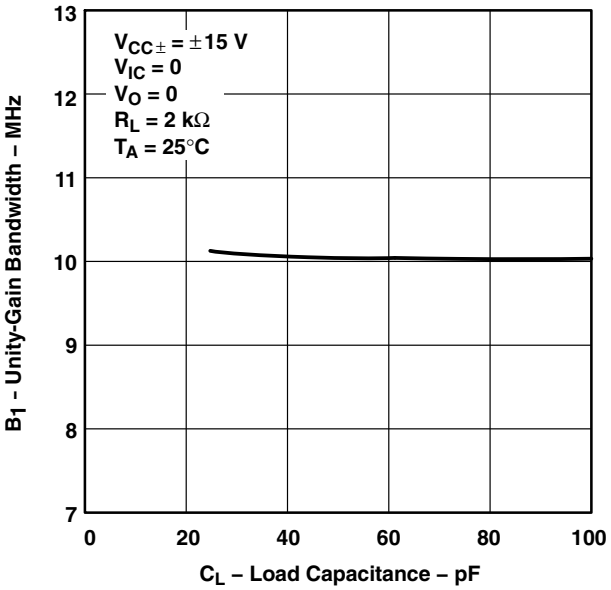

Figure 59

GAIN-BANDWIDTH PRODUCT† vs FREE-AIR TEMPERATURE

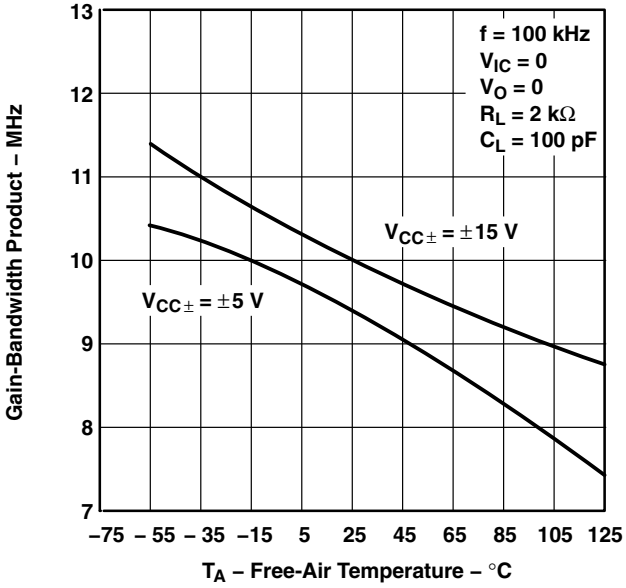

Figure 60

GAIN-BANDWIDTH PRODUCT vs SUPPLY VOLTAGE

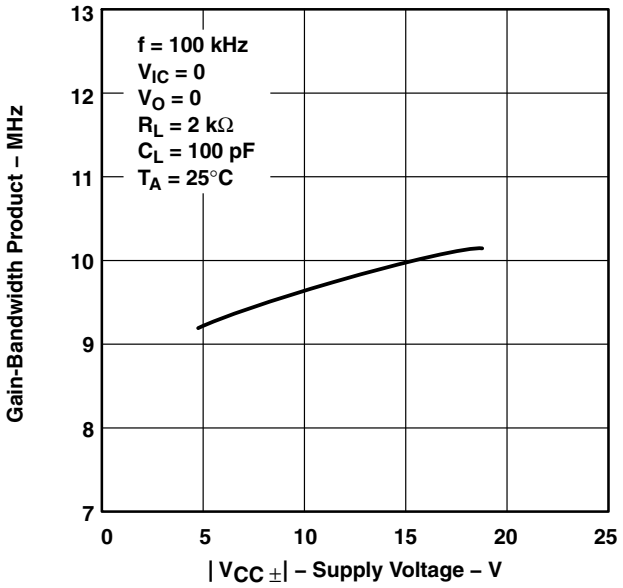

Figure 61

† Data at high and low temperatures are applicable only within the rated operating free-air temperature ranges of the various devices.

TYPICAL CHARACTERISTICS

GAIN MARGIN vs LOAD CAPACITANCE

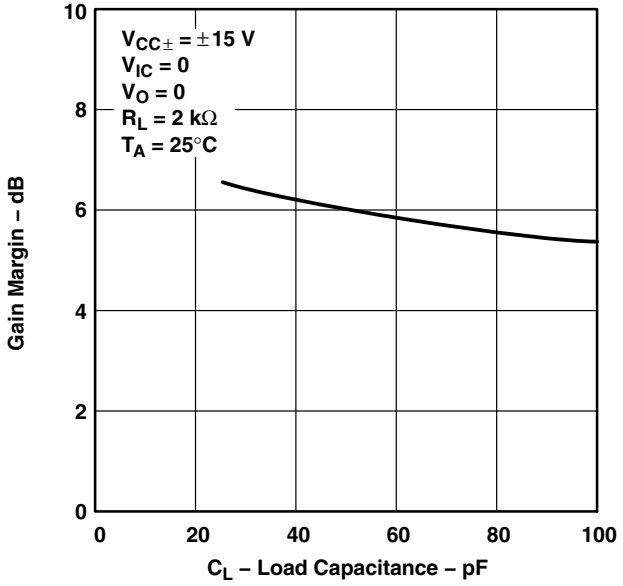

Figure 62

PHASE MARGIN† vs FREE-AIR TEMPERATURE

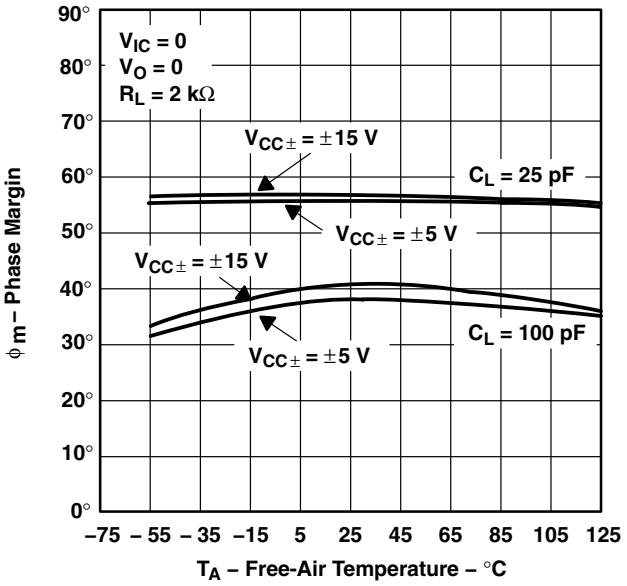

Figure 63

PHASE MARGIN vs SUPPLY VOLTAGE

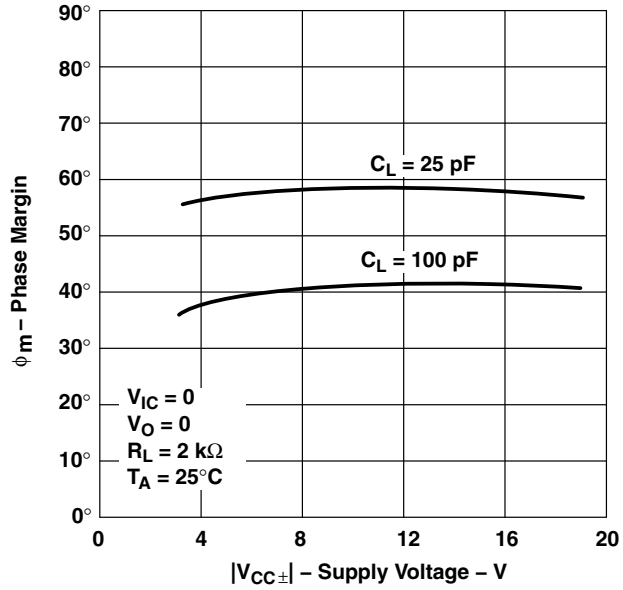

Figure 64

PHASE MARGIN vs LOAD CAPACITANCE

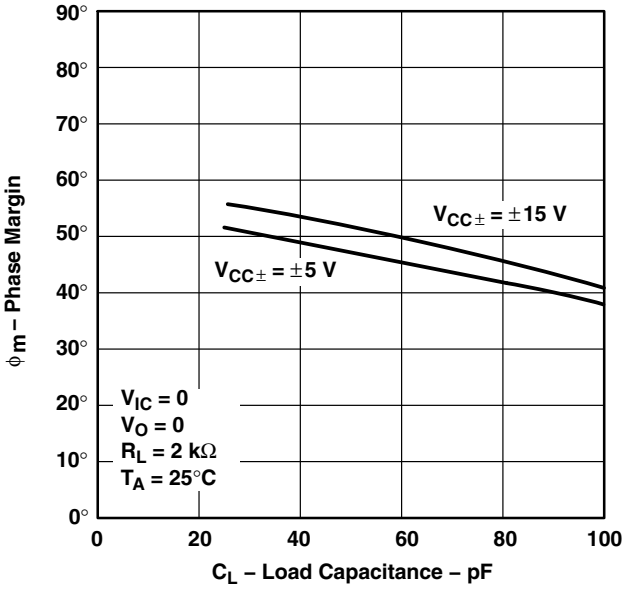

Figure 65

† Data at high and low temperatures are applicable only within the rated operating free-air temperature ranges of the various devices.

TYPICAL CHARACTERISTICS

NONINVERTING LARGE-SIGNAL PULSE RESPONSE†

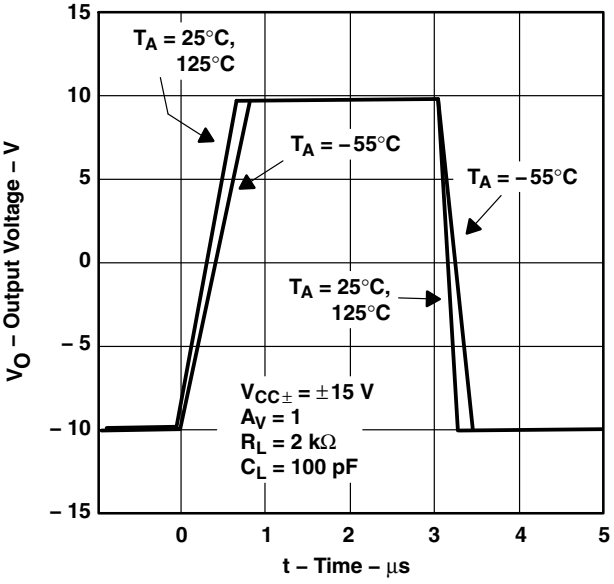

Figure 66

SMALL-SIGNAL PULSE RESPONSE

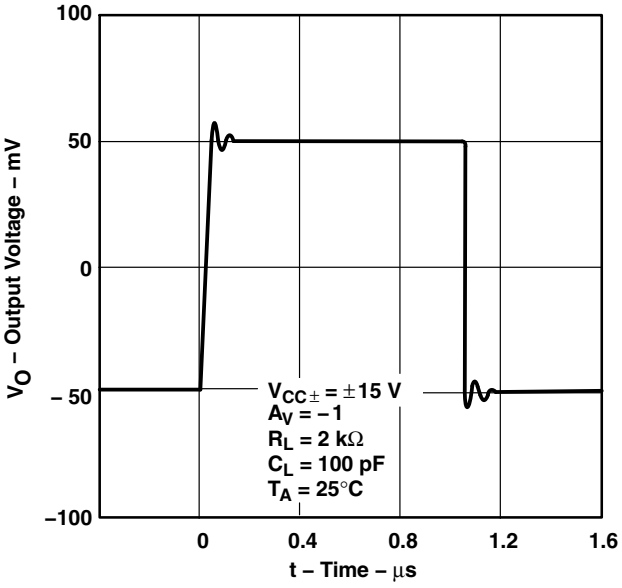

Figure 67

CLOSED-LOOP OUTPUT IMPEDANCE vs FREQUENCY

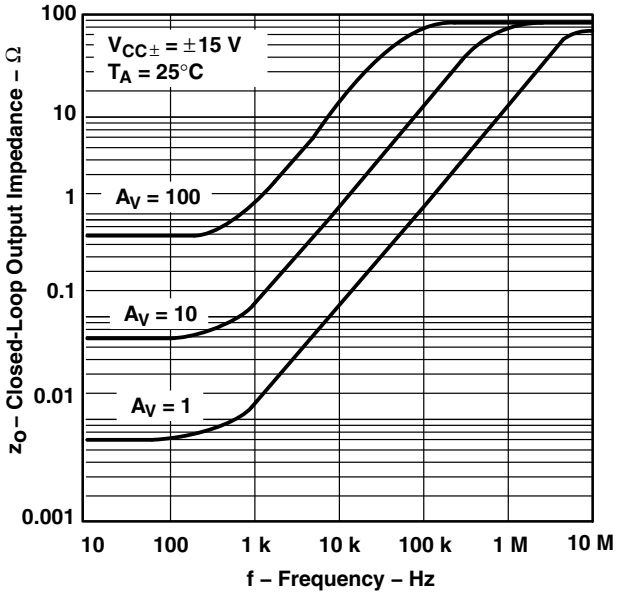

Figure 68

TLE2072 AND TLE2074 CROSSTALK ATTENUATION vs FREQUENCY

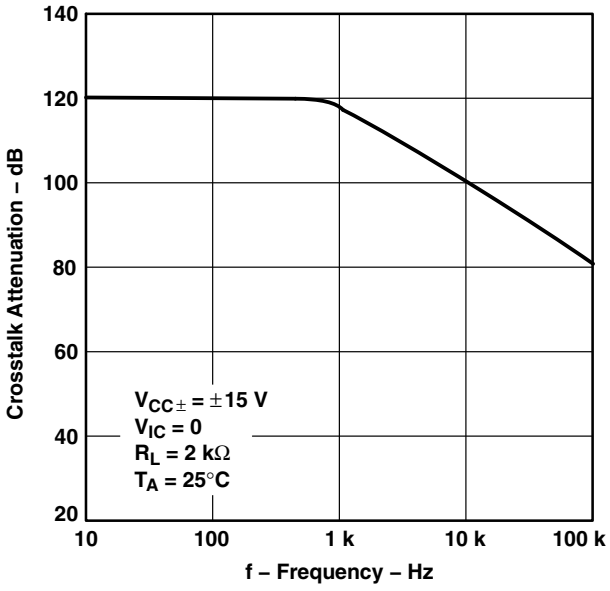

Figure 69

† Data at high and low temperatures are applicable only within the rated operating free-air temperature ranges of the various devices.

APPLICATION INFORMATION

input characteristics

The TLE207x, TLE207xA, and TLE207xB are specified with a minimum and a maximum input voltage that if exceeded at either input could cause the device to malfunction. Because of the extremely high input impedance and resulting low bias current requirements, the TLE207x, TLE207xA, and TLE207xB are well suited for low-level signal processing; however, leakage currents on printed-circuit boards and sockets can easily exceed bias current requirements and cause degradation in system performance. It is good practice to include guard rings around inputs (see Figure 70). These guards should be driven from a low-impedance source at the same voltage level as the common-mode input.

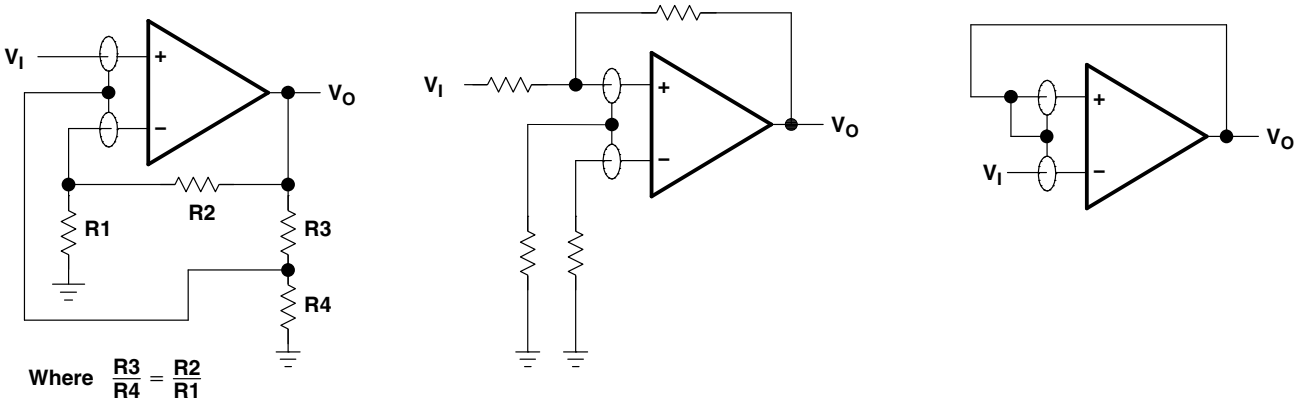

Figure 70. Use of Guard Rings

TLE2071 input offset voltage nulling

The TLE2071 series offers external null pins that can be used to further reduce the input offset voltage. The circuit of Figure 71 can be connected as shown if the feature is desired. When external nulling is not needed, the null pins may be left unconnected.

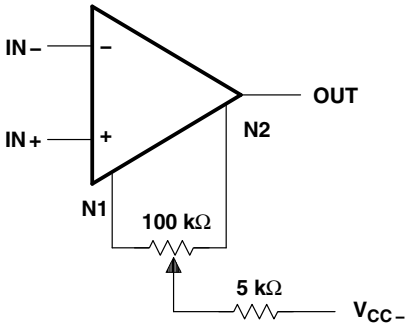

Figure 71. Input Offset Voltage Nulling

APPLICATION INFORMATION

macromodel information

Macromodel information provided was derived using *PSpice*™ *Parts*™ model generation software. The Boyle macromodel (see Note 4) and subcircuit Figure 72 were generated using the TLE207x typical electrical and operating characteristics at $T_A = 25°C$. Using this information, output simulations of the following key parameters can be generated to a tolerance of 20% (in most cases):

- Maximum positive output voltage swing
- Maximum negative output voltage swing
- Slew rate
- Quiescent power dissipation
- Input bias current
- Open-loop voltage amplification
- Unity-gain frequency
- Common-mode rejection ratio
- Phase margin
- DC output resistance
- AC output resistance
- Short-circuit output current limit

NOTE 4: G.R. Boyle, B.M. Cohn, D. O. Pederson, and J. E. Solomon, “Macromodeling of Integrated Circuit Operational Amplifiers”, *IEEE Journal of Solid-State Circuits*, SC-9, 353 (1974).

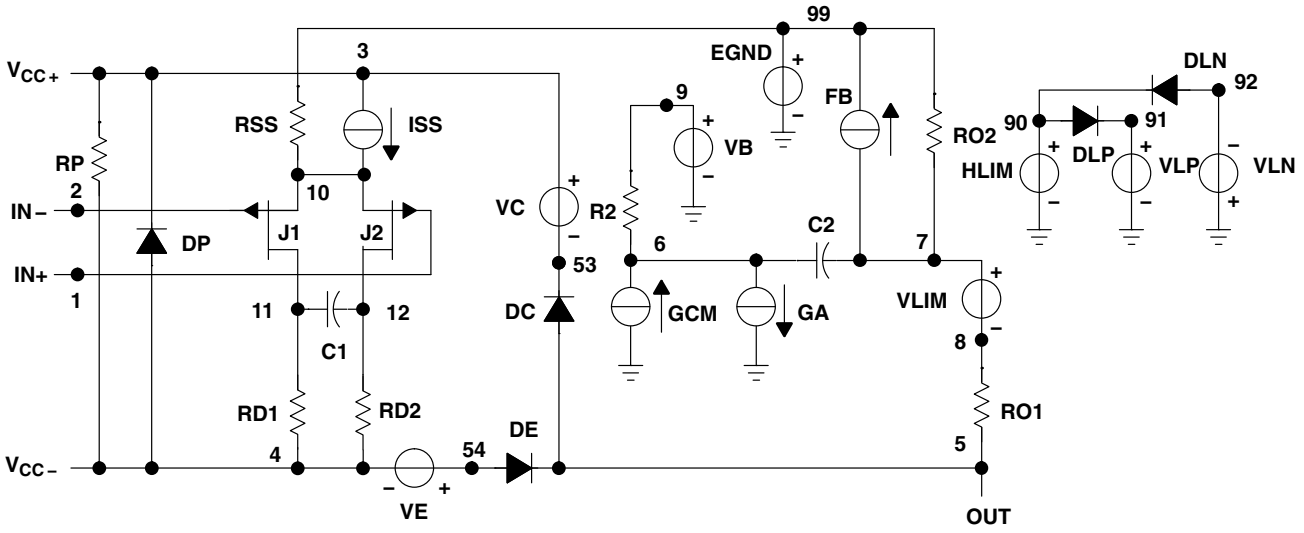


```
.SUBCKT TLE2074 1 2 3 4 5
C1      11      12      2.2E–12
C2      6       7       10.00E–12
DC      5       53      DX
DE      54      5       DX
DLP     90      91      DX
DLN     92      90      DX
DP      4       3       DX
EGND    99      0       POLY (2) (3,0) (4,0) 0 .5 .5
FB      7       99      POLY (5) VB VC VE VLP VLN 0
 + 5.607E6 –6E6 6E6 6E6 –6E6
GA      6       0       11 12 333.0E–6
GCM     0       6       10 99 7.43E–9
ISS     3       10      DC 400.0E–6
HLIM    90      0       VLIM 1K
J1      11      2       10 JX
J2      12      1       10 JX
R2      6       9       100.0E3
RD1     4       11      3.003E3
RD2     4       12      3.003E3
R01     8       5       80
R02     7       99      80
RP      3       4       27.30E3
RSS     10      99      500.0E3
VB      9       0       DC 0
VC      3       53      DC 2.20
VE      54      4       DC 2.20
VLIM    7       8       DC 0
VLP     91      0       DC 45
VLN     0       92      DC 45
.MODEL DX D (IS=800.0E–18)
.MODEL JX PJF (IS=15.00E–12 BETA=554.5E–6
+ VTO=–.6)
.ENDS
```

Figure 72. Boyle Macromodel and Subcircut

PSpice and *Parts* are trademarks of MicroSim Corporation.

Revision History

Version	Date	Changes
C	Dec–2009	– For TLE2071M/1AM (VCC ±5V) changed V_n NOM & MAX from 28/55 to 48/85 (f = 10 Hz); 11.6/17 to 12/17 (f = 10 KHz), Pg. 16 – For TLE2071M/1AM (VCC ±15V) changed V_n NOM & MAX from 28/55 to 48/85 (f = 10 Hz); 11.6/17 to 12/17 (f = 10 KHz), Pg. 18 – For TLE2072M/2AM (VCC ±5V) changed V_n NOM & MAX from 28/55 to 48/85 (f = 10 Hz); 11.6/17 to 12/17 (f = 10 KHz), Pg. 29 – For TLE2072M/2AM (VCC ±15V) changed V_n NOM & MAX from 28/55 to 48/85 (f = 10 Hz); 11.6/17 to 12/17 (f = 10 KHz), Pg. 31 – For TLE2074M/4AM (VCC ±5V) changed V_n NOM & MAX from 28/55 to 48/85 (f = 10 Hz); 11.6/17 to 12/17 (f = 10 KHz), Pg. 42 – For TLE2074M/4AM (VCC ±15V) changed V_n NOM & MAX from 28/55 to 48/85 (f = 10 Hz); 11.6/17 to 12/17 (f = 10 KHz), Pg. 44

PACKAGING INFORMATION

Orderable Device	Status (1)	Package Type	Package Drawing	Pins	Package Qty	Eco Plan (2)	Lead/Ball Finish (6)	MSL Peak Temp (3)	Op Temp (°C)	Device Marking (4/5)	Samples
5962-9460201Q2A	ACTIVE	LCCC	FK	20	1	TBD	POST-PLATE	N / A for Pkg Type	-55 to 125	5962-9460201Q2A TLE2071 MFKB	Samples
5962-9460201QPA	ACTIVE	CDIP	JG	8	1	TBD	A42	N / A for Pkg Type	-55 to 125	9460201QPA TLE2071M	Samples
5962-9460202Q2A	ACTIVE	LCCC	FK	20	1	TBD	POST-PLATE	N / A for Pkg Type	-55 to 125	5962-9460202Q2A TLE2072 MFKB	Samples
5962-9460202QHA	ACTIVE	CFP	U	10	1	TBD	A42	N / A for Pkg Type	-55 to 125	9460202QHA TLE2072M	Samples
5962-9460202QPA	ACTIVE	CDIP	JG	8	1	TBD	A42	N / A for Pkg Type	-55 to 125	9460202QPA TLE2072M	Samples
5962-9460203Q2A	ACTIVE	LCCC	FK	20	1	TBD	POST-PLATE	N / A for Pkg Type	-55 to 125	5962-9460203Q2A TLE2074 MFKB	Samples
5962-9460203QCA	ACTIVE	CDIP	J	14	1	TBD	A42	N / A for Pkg Type	-55 to 125	5962-9460203QC A TLE2074MJB	Samples
5962-9460204Q2A	ACTIVE	LCCC	FK	20	1	TBD	POST-PLATE	N / A for Pkg Type	-55 to 125	5962 9460204Q2A TLE2071 AMFKB	Samples
5962-9460204QHA	ACTIVE	CFP	U	10	1	TBD	A42	N / A for Pkg Type	-55 to 125	9460204QHA TLE2071AM	Samples
5962-9460204QPA	ACTIVE	CDIP	JG	8	1	TBD	A42	N / A for Pkg Type	-55 to 125	9460204QPA TLE2071AM	Samples
5962-9460205Q2A	ACTIVE	LCCC	FK	20	1	TBD	POST-PLATE	N / A for Pkg Type	-55 to 125	5962-9460205Q2A TLE2072 AMFKB	Samples
5962-9460205QHA	ACTIVE	CFP	U	10	1	TBD	A42	N / A for Pkg Type	-55 to 125	9460205QHA TLE2072AM	Samples

Orderable Device	Status (1)	Package Type	Package Drawing	Pins	Package Qty	Eco Plan (2)	Lead/Ball Finish (6)	MSL Peak Temp (3)	Op Temp (°C)	Device Marking (4/5)	Samples
5962-9460205QPA	ACTIVE	CDIP	JG	8	1	TBD	A42	N / A for Pkg Type	-55 to 125	9460205QPA TLE2072AM	Samples
5962-9460206Q2A	ACTIVE	LCCC	FK	20	1	TBD	POST-PLATE	N / A for Pkg Type	-55 to 125	5962-9460206Q2A TLE2074 AMFKB	Samples
5962-9460206QCA	ACTIVE	CDIP	J	14	1	TBD	A42	N / A for Pkg Type	-55 to 125	5962-9460206QCA TLE2074AMJB	Samples
5962-9460206QDA	ACTIVE	CFP	W	14	1	TBD	A42	N / A for Pkg Type	-55 to 125	5962-9460206QDA TLE2074AMWB	Samples
TLE2071ACD	ACTIVE	SOIC	D	8	75	Green (RoHS & no Sb/Br)	CU NIPDAU	Level-1-260C-UNLIM	0 to 70	2071AC	Samples
TLE2071ACDR	ACTIVE	SOIC	D	8	2500	Green (RoHS & no Sb/Br)	CU NIPDAU	Level-1-260C-UNLIM		2071AC	Samples
TLE2071ACP	ACTIVE	PDIP	P	8	50	Green (RoHS & no Sb/Br)	CU NIPDAU	N / A for Pkg Type		TLE2071AC	Samples
TLE2071ACPE4	ACTIVE	PDIP	P	8	50	Green (RoHS & no Sb/Br)	CU NIPDAU	N / A for Pkg Type		TLE2071AC	Samples
TLE2071AID	ACTIVE	SOIC	D	8	75	Green (RoHS & no Sb/Br)	CU NIPDAU	Level-1-260C-UNLIM	-40 to 85	2071AI	Samples
TLE2071AIDG4	ACTIVE	SOIC	D	8	75	Green (RoHS & no Sb/Br)	CU NIPDAU	Level-1-260C-UNLIM	-40 to 85	2071AI	Samples
TLE2071AIDR	ACTIVE	SOIC	D	8	2500	Green (RoHS & no Sb/Br)	CU NIPDAU	Level-1-260C-UNLIM		2071AI	Samples
TLE2071AIP	ACTIVE	PDIP	P	8	50	Green (RoHS & no Sb/Br)	CU NIPDAU	N / A for Pkg Type		TLE2071AI	Samples
TLE2071AMFKB	ACTIVE	LCCC	FK	20	1	TBD	POST-PLATE	N / A for Pkg Type	-55 to 125	5962 9460204Q2A TLE2071 AMFKB	Samples
TLE2071AMJG	ACTIVE	CDIP	JG	8	1	TBD	A42	N / A for Pkg Type	-55 to 125	TLE2071 AMJG	Samples
TLE2071AMJGB	ACTIVE	CDIP	JG	8	1	TBD	A42	N / A for Pkg Type	-55 to 125	9460204QPA TLE2071AM	Samples

Orderable Device	Status (1)	Package Type	Package Drawing	Pins	Package Qty	Eco Plan (2)	Lead/Ball Finish (6)	MSL Peak Temp (3)	Op Temp (°C)	Device Marking (4/5)	Samples
TLE2071AMUB	ACTIVE	CFP	U	10	1	TBD	A42	N / A for Pkg Type	-55 to 125	9460204QHA TLE2071AM	Samples
TLE2071CD	ACTIVE	SOIC	D	8	75	Green (RoHS & no Sb/Br)	CU NIPDAU	Level-1-260C-UNLIM	0 to 70	2071C	Samples
TLE2071CDG4	ACTIVE	SOIC	D	8	75	Green (RoHS & no Sb/Br)	CU NIPDAU	Level-1-260C-UNLIM	0 to 70	2071C	Samples
TLE2071CP	ACTIVE	PDIP	P	8	50	Green (RoHS & no Sb/Br)	CU NIPDAU	N / A for Pkg Type		TLE2071CP	Samples
TLE2071CPE4	ACTIVE	PDIP	P	8	50	Green (RoHS & no Sb/Br)	CU NIPDAU	N / A for Pkg Type		TLE2071CP	Samples
TLE2071ID	ACTIVE	SOIC	D	8	75	Green (RoHS & no Sb/Br)	CU NIPDAU	Level-1-260C-UNLIM	-40 to 85	2071I	Samples
TLE2071IDG4	ACTIVE	SOIC	D	8	75	Green (RoHS & no Sb/Br)	CU NIPDAU	Level-1-260C-UNLIM	-40 to 85	2071I	Samples
TLE2071IDR	ACTIVE	SOIC	D	8	2500	Green (RoHS & no Sb/Br)	CU NIPDAU	Level-1-260C-UNLIM		2071I	Samples
TLE2071IP	ACTIVE	PDIP	P	8	50	Green (RoHS & no Sb/Br)	CU NIPDAU	N / A for Pkg Type		TLE2071IP	Samples
TLE2071MFKB	ACTIVE	LCCC	FK	20	1	TBD	POST-PLATE	N / A for Pkg Type	-55 to 125	5962-9460201Q2A TLE2071 MFKB	Samples
TLE2071MJG	ACTIVE	CDIP	JG	8	1	TBD	A42	N / A for Pkg Type	-55 to 125	TLE2071MJG	Samples
TLE2071MJGB	ACTIVE	CDIP	JG	8	1	TBD	A42	N / A for Pkg Type	-55 to 125	9460201QPA TLE2071M	Samples
TLE2072ACD	ACTIVE	SOIC	D	8	75	Green (RoHS & no Sb/Br)	CU NIPDAU	Level-1-260C-UNLIM	0 to 70	2072AC	Samples
TLE2072ACP	ACTIVE	PDIP	P	8	50	Green (RoHS & no Sb/Br)	CU NIPDAU	N / A for Pkg Type		TLE2072AC	Samples
TLE2072ACPE4	ACTIVE	PDIP	P	8	50	Green (RoHS & no Sb/Br)	CU NIPDAU	N / A for Pkg Type		TLE2072AC	Samples
TLE2072AID	ACTIVE	SOIC	D	8	75	Green (RoHS & no Sb/Br)	CU NIPDAU	Level-1-260C-UNLIM	-40 to 85	2072AI	Samples
TLE2072AIDG4	ACTIVE	SOIC	D	8	75	Green (RoHS & no Sb/Br)	CU NIPDAU	Level-1-260C-UNLIM	-40 to 85	2072AI	Samples

Orderable Device	Status (1)	Package Type	Package Drawing	Pins	Package Qty	Eco Plan (2)	Lead/Ball Finish (6)	MSL Peak Temp (3)	Op Temp (°C)	Device Marking (4/5)	Samples
TLE2072AIDR	ACTIVE	SOIC	D	8	2500	Green (RoHS & no Sb/Br)	CU NIPDAU	Level-1-260C-UNLIM		2072AI	Samples
TLE2072AIP	ACTIVE	PDIP	P	8	50	Green (RoHS & no Sb/Br)	CU NIPDAU	N / A for Pkg Type		TLE2072AI	Samples
TLE2072AMFKB	ACTIVE	LCCC	FK	20	1	TBD	POST-PLATE	N / A for Pkg Type	-55 to 125	5962-9460205Q2A TLE2072 AMFKB	Samples
TLE2072AMJG	ACTIVE	CDIP	JG	8	1	TBD	A42	N / A for Pkg Type	-55 to 125	TLE2072 AMJG	Samples
TLE2072AMJGB	ACTIVE	CDIP	JG	8	1	TBD	A42	N / A for Pkg Type	-55 to 125	9460205QPA TLE2072AM	Samples
TLE2072AMUB	ACTIVE	CFP	U	10	1	TBD	A42	N / A for Pkg Type	-55 to 125	9460205QHA TLE2072AM	Samples
TLE2072CD	ACTIVE	SOIC	D	8	75	Green (RoHS & no Sb/Br)	CU NIPDAU	Level-1-260C-UNLIM		2072C	Samples
TLE2072CDR	ACTIVE	SOIC	D	8	2500	Green (RoHS & no Sb/Br)	CU NIPDAU	Level-1-260C-UNLIM		2072C	Samples
TLE2072CDRG4	ACTIVE	SOIC	D	8	2500	Green (RoHS & no Sb/Br)	CU NIPDAU	Level-1-260C-UNLIM		2072C	Samples
TLE2072CP	ACTIVE	PDIP	P	8	50	Green (RoHS & no Sb/Br)	CU NIPDAU	N / A for Pkg Type		TLE2072CP	Samples
TLE2072ID	ACTIVE	SOIC	D	8	75	Green (RoHS & no Sb/Br)	CU NIPDAU	Level-1-260C-UNLIM		2072I	Samples
TLE2072IDR	ACTIVE	SOIC	D	8	2500	Green (RoHS & no Sb/Br)	CU NIPDAU	Level-1-260C-UNLIM	-40 to 85	2072I	Samples
TLE2072IDRG4	ACTIVE	SOIC	D	8	2500	Green (RoHS & no Sb/Br)	CU NIPDAU	Level-1-260C-UNLIM	-40 to 85	2072I	Samples
TLE2072IP	ACTIVE	PDIP	P	8	50	Green (RoHS & no Sb/Br)	CU NIPDAU	N / A for Pkg Type		TLE2072IP	Samples
TLE2072MFKB	ACTIVE	LCCC	FK	20	1	TBD	POST-PLATE	N / A for Pkg Type	-55 to 125	5962-9460202Q2A TLE2072 MFKB	Samples
TLE2072MJG	ACTIVE	CDIP	JG	8	1	TBD	A42	N / A for Pkg Type	-55 to 125	TLE2072MJG	Samples

Orderable Device	Status (1)	Package Type	Package Drawing	Pins	Package Qty	Eco Plan (2)	Lead/Ball Finish (6)	MSL Peak Temp (3)	Op Temp (°C)	Device Marking (4/5)	Samples
TLE2072MJGB	ACTIVE	CDIP	JG	8	1	TBD	A42	N / A for Pkg Type	-55 to 125	9460202QPA TLE2072M	Samples
TLE2072MUB	ACTIVE	CFP	U	10	1	TBD	A42	N / A for Pkg Type	-55 to 125	9460202QHA TLE2072M	Samples
TLE2074ACDW	ACTIVE	SOIC	DW	16	40	Green (RoHS & no Sb/Br)	CU NIPDAU	Level-1-260C-UNLIM	0 to 70	TLE2074AC	Samples
TLE2074ACN	ACTIVE	PDIP	N	14	25	Green (RoHS & no Sb/Br)	CU NIPDAU	N / A for Pkg Type		TLE2074ACN	Samples
TLE2074ACNE4	ACTIVE	PDIP	N	14	25	Green (RoHS & no Sb/Br)	CU NIPDAU	N / A for Pkg Type		TLE2074ACN	Samples
TLE2074AIDW	ACTIVE	SOIC	DW	16	40	Green (RoHS & no Sb/Br)	CU NIPDAU	Level-1-260C-UNLIM	-40 to 85	TLE2074AI	Samples
TLE2074AIN	ACTIVE	PDIP	N	14	25	Green (RoHS & no Sb/Br)	CU NIPDAU	N / A for Pkg Type		TLE2074AIN	Samples
TLE2074AINE4	ACTIVE	PDIP	N	14	25	Green (RoHS & no Sb/Br)	CU NIPDAU	N / A for Pkg Type		TLE2074AIN	Samples
TLE2074AMFKB	ACTIVE	LCCC	FK	20	1	TBD	POST-PLATE	N / A for Pkg Type	-55 to 125	5962-9460206Q2A TLE2074 AMFKB	Samples
TLE2074AMJ	ACTIVE	CDIP	J	14	1	TBD	A42	N / A for Pkg Type	-55 to 125	TLE2074AMJ	Samples
TLE2074AMJB	ACTIVE	CDIP	J	14	1	TBD	A42	N / A for Pkg Type	-55 to 125	5962-9460206QC A TLE2074AMJB	Samples
TLE2074AMWB	ACTIVE	CFP	W	14	1	TBD	A42	N / A for Pkg Type	-55 to 125	5962-9460206QD A TLE2074AMWB	Samples
TLE2074CDW	ACTIVE	SOIC	DW	16	40	Green (RoHS & no Sb/Br)	CU NIPDAU	Level-1-260C-UNLIM	0 to 70	TLE2074C	Samples
TLE2074CDWR	ACTIVE	SOIC	DW	16	2000	Green (RoHS & no Sb/Br)	CU NIPDAU	Level-1-260C-UNLIM		TLE2074C	Samples
TLE2074CN	ACTIVE	PDIP	N	14	25	Green (RoHS & no Sb/Br)	CU NIPDAU	N / A for Pkg Type		TLE2074CN	Samples
TLE2074CNE4	ACTIVE	PDIP	N	14	25	Green (RoHS & no Sb/Br)	CU NIPDAU	N / A for Pkg Type		TLE2074CN	Samples

Orderable Device	Status (1)	Package Type	Package Drawing	Pins	Package Qty	Eco Plan (2)	Lead/Ball Finish (6)	MSL Peak Temp (3)	Op Temp (°C)	Device Marking (4/5)	Samples
TLE2074IDW	ACTIVE	SOIC	DW	16	40	Green (RoHS & no Sb/Br)	CU NIPDAU	Level-1-260C-UNLIM	-40 to 85	TLE2074I	Samples
TLE2074IDWG4	ACTIVE	SOIC	DW	16	40	Green (RoHS & no Sb/Br)	CU NIPDAU	Level-1-260C-UNLIM	-40 to 85	TLE2074I	Samples
TLE2074IDWR	ACTIVE	SOIC	DW	16	2000	Green (RoHS & no Sb/Br)	CU NIPDAU	Level-1-260C-UNLIM		TLE2074I	Samples
TLE2074IN	ACTIVE	PDIP	N	14	25	Green (RoHS & no Sb/Br)	CU NIPDAU	N / A for Pkg Type		TLE2074IN	Samples
TLE2074MFKB	ACTIVE	LCCC	FK	20	1	TBD	POST-PLATE	N / A for Pkg Type	-55 to 125	5962-9460203Q2A TLE2074 MFKB	Samples
TLE2074MJ	ACTIVE	CDIP	J	14	1	TBD	A42	N / A for Pkg Type	-55 to 125	TLE2074MJ	Samples
TLE2074MJB	ACTIVE	CDIP	J	14	1	TBD	A42	N / A for Pkg Type	-55 to 125	5962-9460203QCA TLE2074MJB	Samples

(1) The marketing status values are defined as follows:
ACTIVE: Product device recommended for new designs.
LIFEBUY: TI has announced that the device will be discontinued, and a lifetime-buy period is in effect.
NRND: Not recommended for new designs. Device is in production to support existing customers, but TI does not recommend using this part in a new design.
PREVIEW: Device has been announced but is not in production. Samples may or may not be available.
OBSOLETE: TI has discontinued the production of the device.

(2) **RoHS:** TI defines "RoHS" to mean semiconductor products that are compliant with the current EU RoHS requirements for all 10 RoHS substances, including the requirement that RoHS substance do not exceed 0.1% by weight in homogeneous materials. Where designed to be soldered at high temperatures, "RoHS" products are suitable for use in specified lead-free processes. TI may reference these types of products as "Pb-Free".
RoHS Exempt: TI defines "RoHS Exempt" to mean products that contain lead but are compliant with EU RoHS pursuant to a specific EU RoHS exemption.
Green: TI defines "Green" to mean the content of Chlorine (Cl) and Bromine (Br) based flame retardants meet JS709B low halogen requirements of <=1000ppm threshold. Antimony trioxide based flame retardants must also meet the <=1000ppm threshold requirement.

(3) MSL, Peak Temp. - The Moisture Sensitivity Level rating according to the JEDEC industry standard classifications, and peak solder temperature.

(4) There may be additional marking, which relates to the logo, the lot trace code information, or the environmental category on the device.

(5) Multiple Device Markings will be inside parentheses. Only one Device Marking contained in parentheses and separated by a "~" will appear on a device. If a line is indented then it is a continuation of the previous line and the two combined represent the entire Device Marking for that device.

(6) Lead/Ball Finish - Orderable Devices may have multiple material finish options. Finish options are separated by a vertical ruled line. Lead/Ball Finish values may wrap to two lines if the finish value exceeds the maximum column width.

Important Information and Disclaimer: The information provided on this page represents TI's knowledge and belief as of the date that it is provided. TI bases its knowledge and belief on information provided by third parties, and makes no representation or warranty as to the accuracy of such information. Efforts are underway to better integrate information from third parties. TI has taken and continues to take reasonable steps to provide representative and accurate information but may not have conducted destructive testing or chemical analysis on incoming materials and chemicals. TI and TI suppliers consider certain information to be proprietary, and thus CAS numbers and other limited information may not be available for release.

In no event shall TI's liability arising out of such information exceed the total purchase price of the TI part(s) at issue in this document sold by TI to Customer on an annual basis.

OTHER QUALIFIED VERSIONS OF TLE2071, TLE2071A, TLE2071AM, TLE2071M, TLE2072, TLE2072A, TLE2072AM, TLE2072M, TLE2074, TLE2074A, TLE2074AM, TLE2074M :

- Catalog: TLE2071A, TLE2071, TLE2072A, TLE2072, TLE2074A, TLE2074
- Automotive: TLE2071A-Q1, TLE2071A-Q1, TLE2072A-Q1, TLE2072A-Q1
- Military: TLE2071M, TLE2071AM, TLE2072M, TLE2072AM, TLE2074M, TLE2074AM

NOTE: Qualified Version Definitions:

- Catalog - TI's standard catalog product
- Automotive - Q100 devices qualified for high-reliability automotive applications targeting zero defects
- Military - QML certified for Military and Defense Applications

TAPE AND REEL INFORMATION

REEL DIMENSIONS

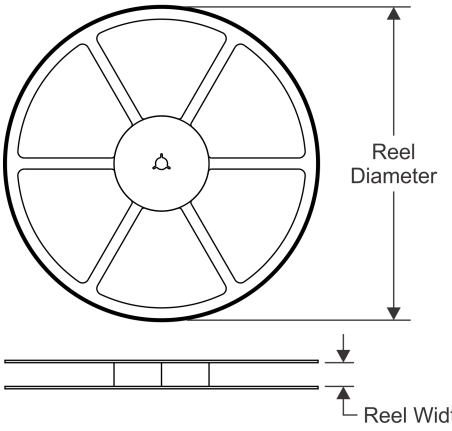

TAPE DIMENSIONS

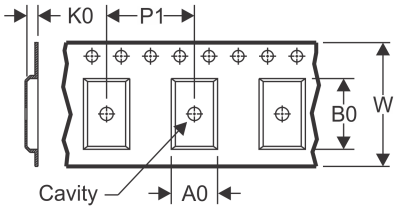

A0	Dimension designed to accommodate the component width
B0	Dimension designed to accommodate the component length
K0	Dimension designed to accommodate the component thickness
W	Overall width of the carrier tape
P1	Pitch between successive cavity centers

QUADRANT ASSIGNMENTS FOR PIN 1 ORIENTATION IN TAPE

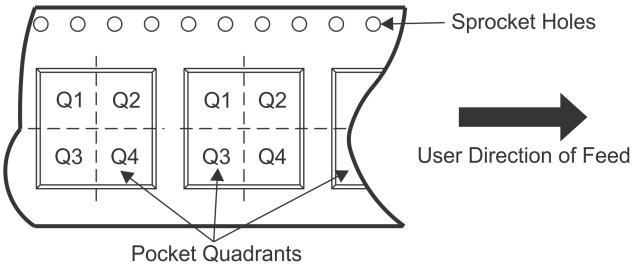

*All dimensions are nominal

Device	Package Type	Package Drawing	Pins	SPQ	Reel Diameter (mm)	Reel Width W1 (mm)	A0 (mm)	B0 (mm)	K0 (mm)	P1 (mm)	W (mm)	Pin1 Quadrant
TLE2071ACDR	SOIC	D	8	2500	330.0	12.4	6.4	5.2	2.1	8.0	12.0	Q1
TLE2071AIDR	SOIC	D	8	2500	330.0	12.4	6.4	5.2	2.1	8.0	12.0	Q1
TLE2071IDR	SOIC	D	8	2500	330.0	12.4	6.4	5.2	2.1	8.0	12.0	Q1
TLE2072AIDR	SOIC	D	8	2500	330.0	12.4	6.4	5.2	2.1	8.0	12.0	Q1
TLE2072CDR	SOIC	D	8	2500	330.0	12.4	6.4	5.2	2.1	8.0	12.0	Q1
TLE2072IDR	SOIC	D	8	2500	330.0	12.4	6.4	5.2	2.1	8.0	12.0	Q1
TLE2072IDR	SOIC	D	8	2500	330.0	12.4	6.4	5.2	2.1	8.0	12.0	Q1
TLE2072IDR	SOIC	D	8	2500	330.0	12.4	6.4	5.2	2.1	8.0	12.0	Q1
TLE2074CDWR	SOIC	DW	16	2000	330.0	16.4	10.75	10.7	2.7	12.0	16.0	Q1
TLE2074IDWR	SOIC	DW	16	2000	330.0	16.4	10.75	10.7	2.7	12.0	16.0	Q1

TAPE AND REEL BOX DIMENSIONS

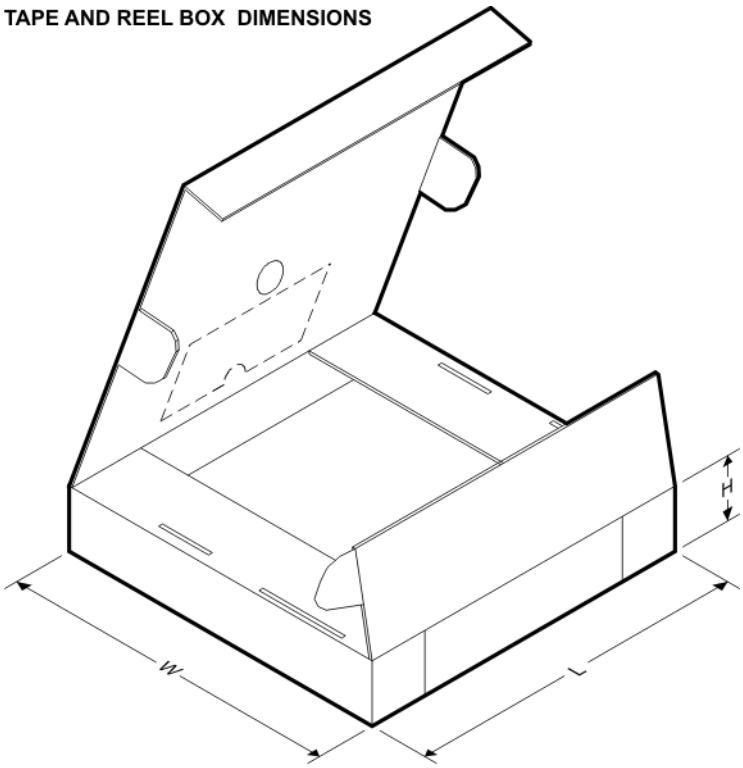

*All dimensions are nominal

Device	Package Type	Package Drawing	Pins	SPQ	Length (mm)	Width (mm)	Height (mm)
TLE2071ACDR	SOIC	D	8	2500	340.5	338.1	20.6
TLE2071AIDR	SOIC	D	8	2500	340.5	338.1	20.6
TLE2071IDR	SOIC	D	8	2500	340.5	338.1	20.6
TLE2072AIDR	SOIC	D	8	2500	340.5	338.1	20.6
TLE2072CDR	SOIC	D	8	2500	340.5	338.1	20.6
TLE2072IDR	SOIC	D	8	2500	340.5	338.1	20.6
TLE2072IDR	SOIC	D	8	2500	350.0	350.0	43.0
TLE2072IDR	SOIC	D	8	2500	367.0	367.0	35.0
TLE2074CDWR	SOIC	DW	16	2000	350.0	350.0	43.0
TLE2074IDWR	SOIC	DW	16	2000	350.0	350.0	43.0

U (S–GDFP–F10) CERAMIC DUAL FLATPACK

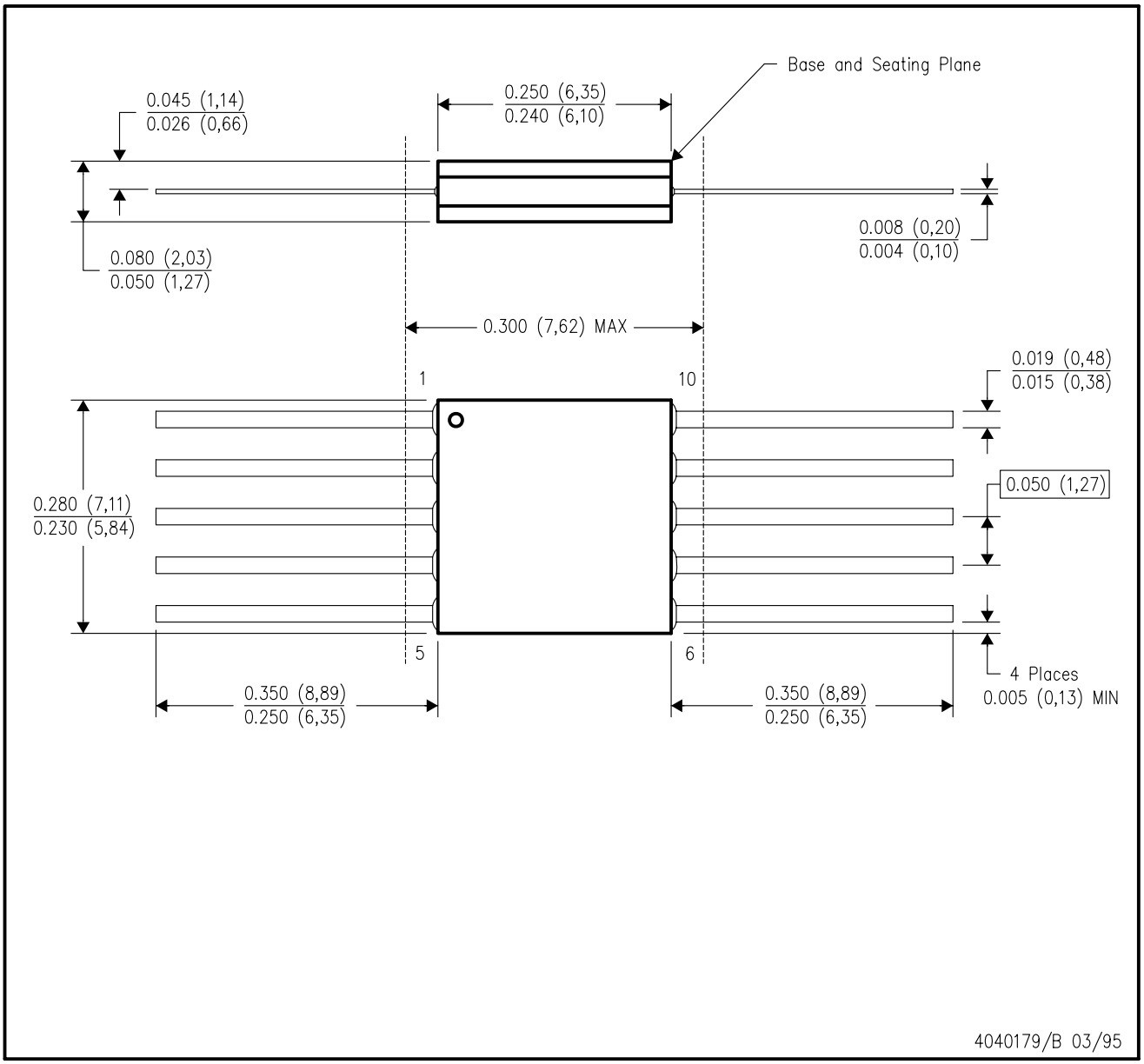

NOTES:
- A. All linear dimensions are in inches (millimeters).
- B. This drawing is subject to change without notice.
- C. This package can be hermetically sealed with a ceramic lid using glass frit.
- D. Index point is provided on cap for terminal identification only.
- E. Falls within MIL STD 1835 GDFP1–F10 and JEDEC MO–092AA

W (R–GDFP–F14) CERAMIC DUAL FLATPACK

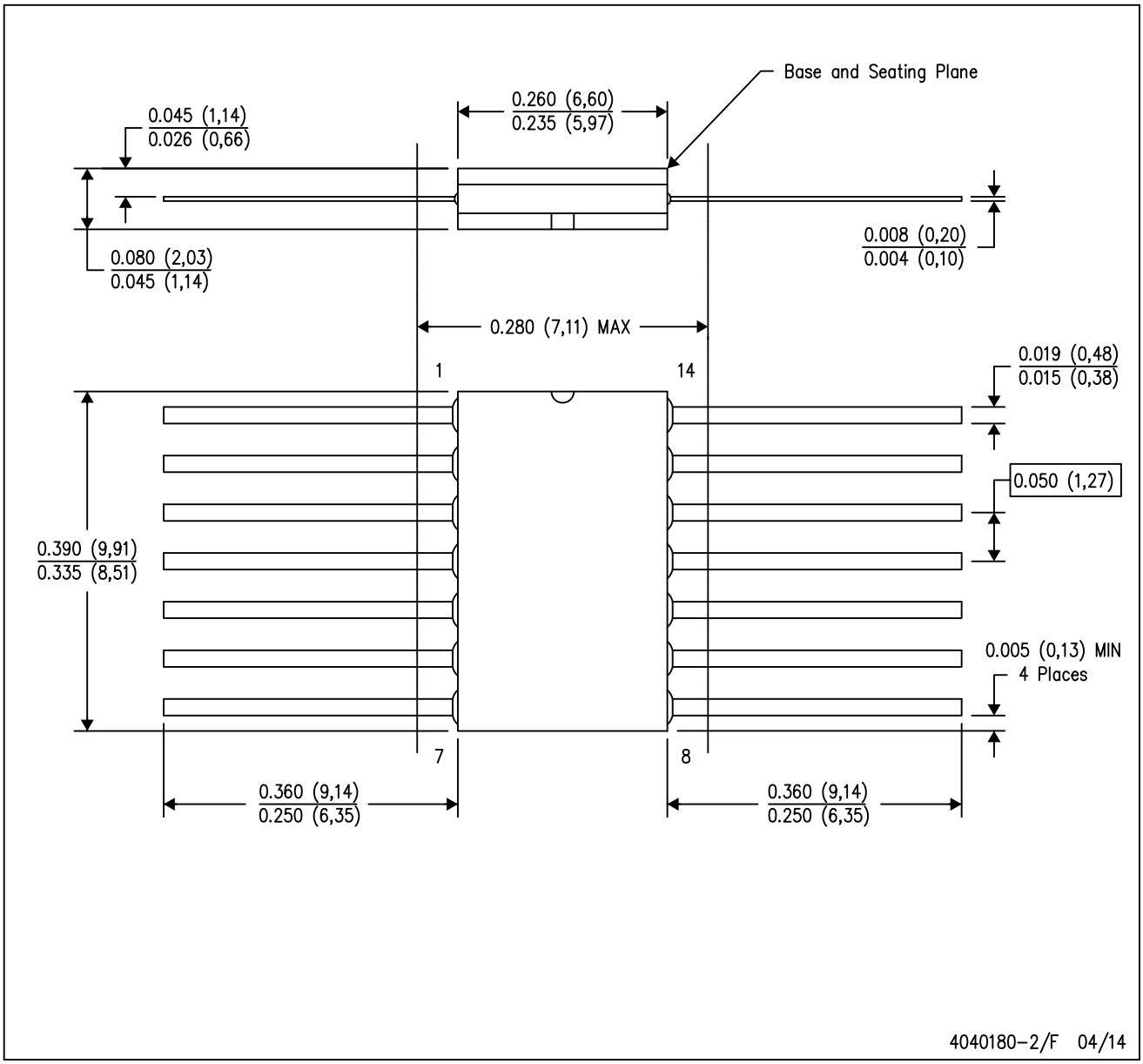

NOTES:
A. All linear dimensions are in inches (millimeters).
B. This drawing is subject to change without notice.
C. This package can be hermetically sealed with a ceramic lid using glass frit.
D. Index point is provided on cap for terminal identification only.
E. Falls within MIL STD 1835 GDFP1–F14

GENERIC PACKAGE VIEW

DW 16

SOIC - 2.65 mm max height

7.5 x 10.3, 1.27 mm pitch

SMALL OUTLINE INTEGRATED CIRCUIT

This image is a representation of the package family, actual package may vary.
Refer to the product data sheet for package details.

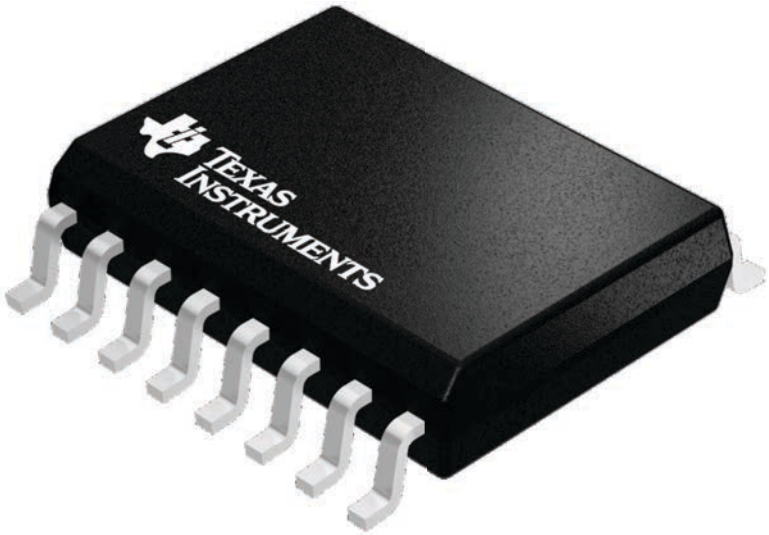

4224780/A

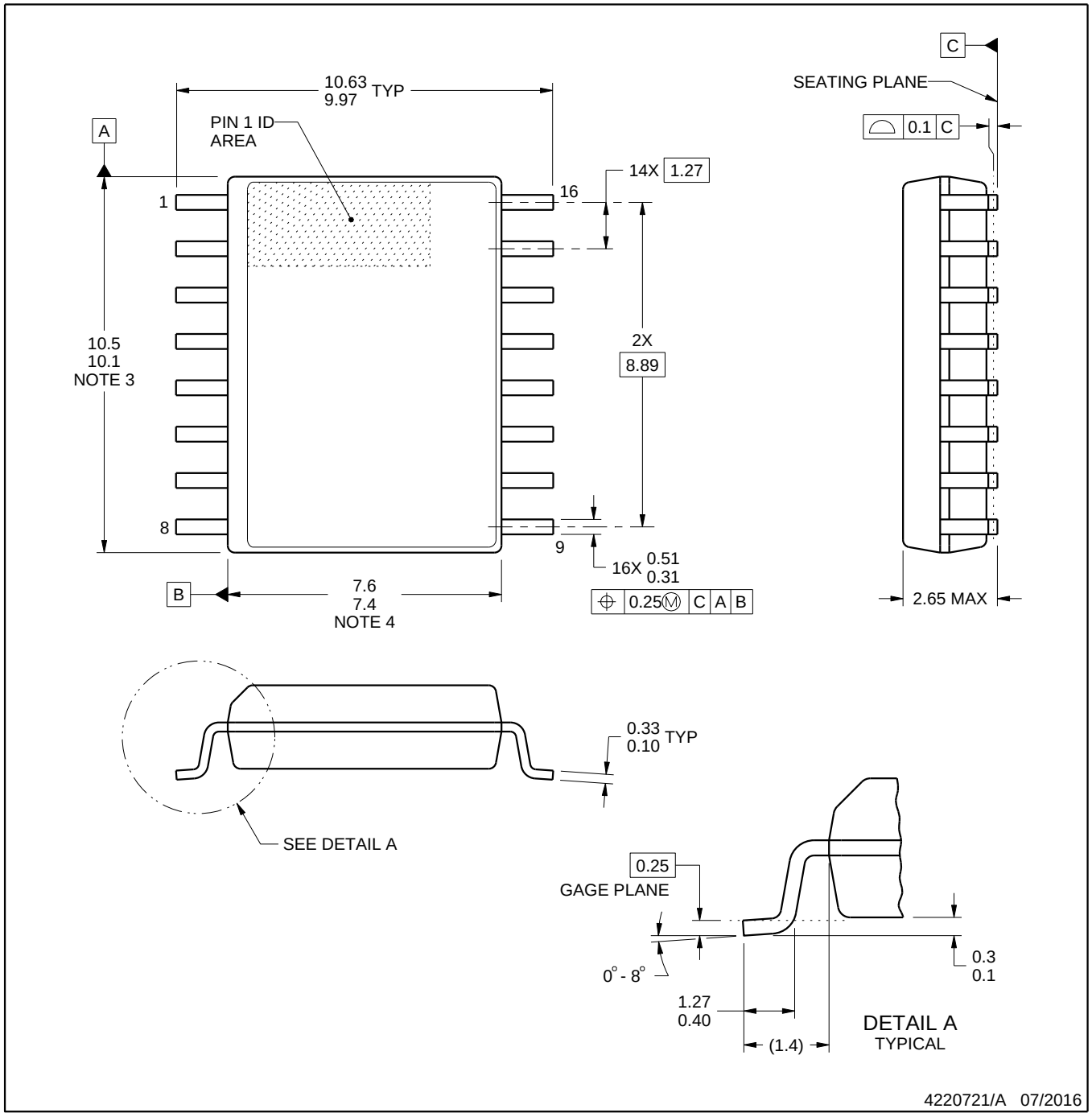

NOTES:

1. All linear dimensions are in millimeters. Dimensions in parenthesis are for reference only. Dimensioning and tolerancing per ASME Y14.5M.
2. This drawing is subject to change without notice.
3. This dimension does not include mold flash, protrusions, or gate burrs. Mold flash, protrusions, or gate burrs shall not exceed 0.15 mm, per side.
4. This dimension does not include interlead flash. Interlead flash shall not exceed 0.25 mm, per side.
5. Reference JEDEC registration MS-013.

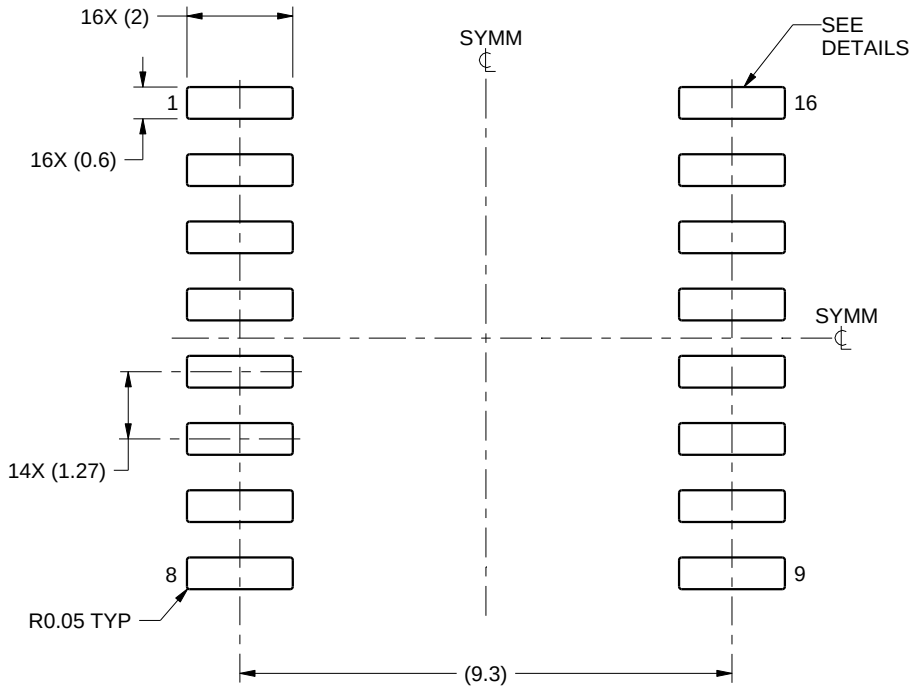

LAND PATTERN EXAMPLE
SCALE:7X

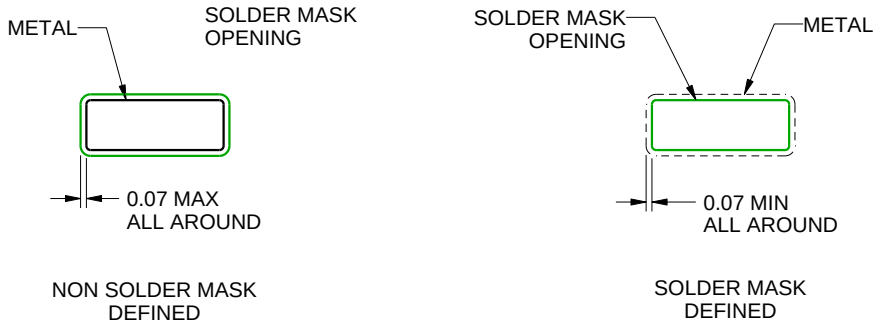

SOLDER MASK DETAILS

4220721/A 07/2016

NOTES: (continued)

6. Publication IPC-7351 may have alternate designs.
7. Solder mask tolerances between and around signal pads can vary based on board fabrication site.

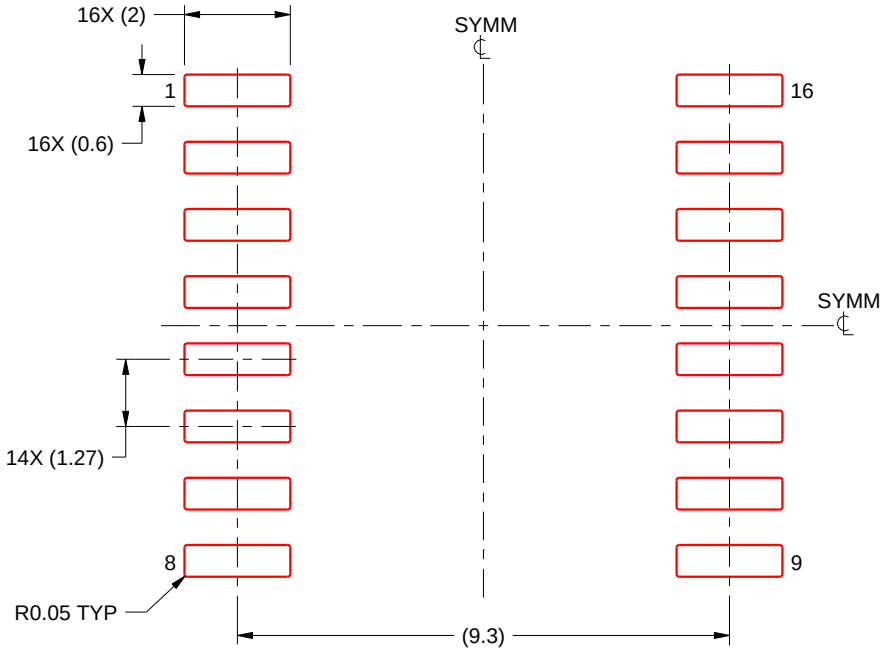

SOLDER PASTE EXAMPLE
BASED ON 0.125 mm THICK STENCIL
SCALE:7X

4220721/A 07/2016

NOTES: (continued)

8. Laser cutting apertures with trapezoidal walls and rounded corners may offer better paste release. IPC-7525 may have alternate design recommendations.
9. Board assembly site may have different recommendations for stencil design.

J 14 CDIP - 5.08 mm max height

CERAMIC DUAL IN LINE PACKAGE

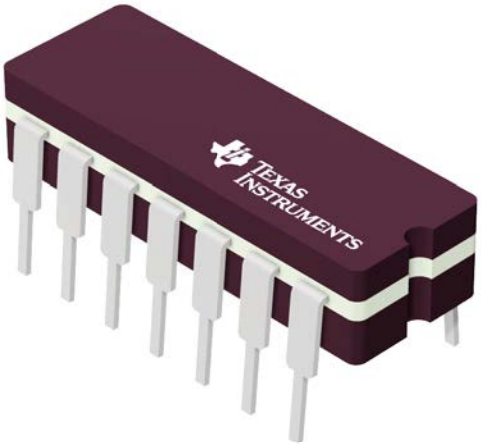

Images above are just a representation of the package family, actual package may vary.
Refer to the product data sheet for package details.

4040083-5/G

PACKAGE OUTLINE

J0014A

CDIP - 5.08 mm max height

CERAMIC DUAL IN LINE PACKAGE

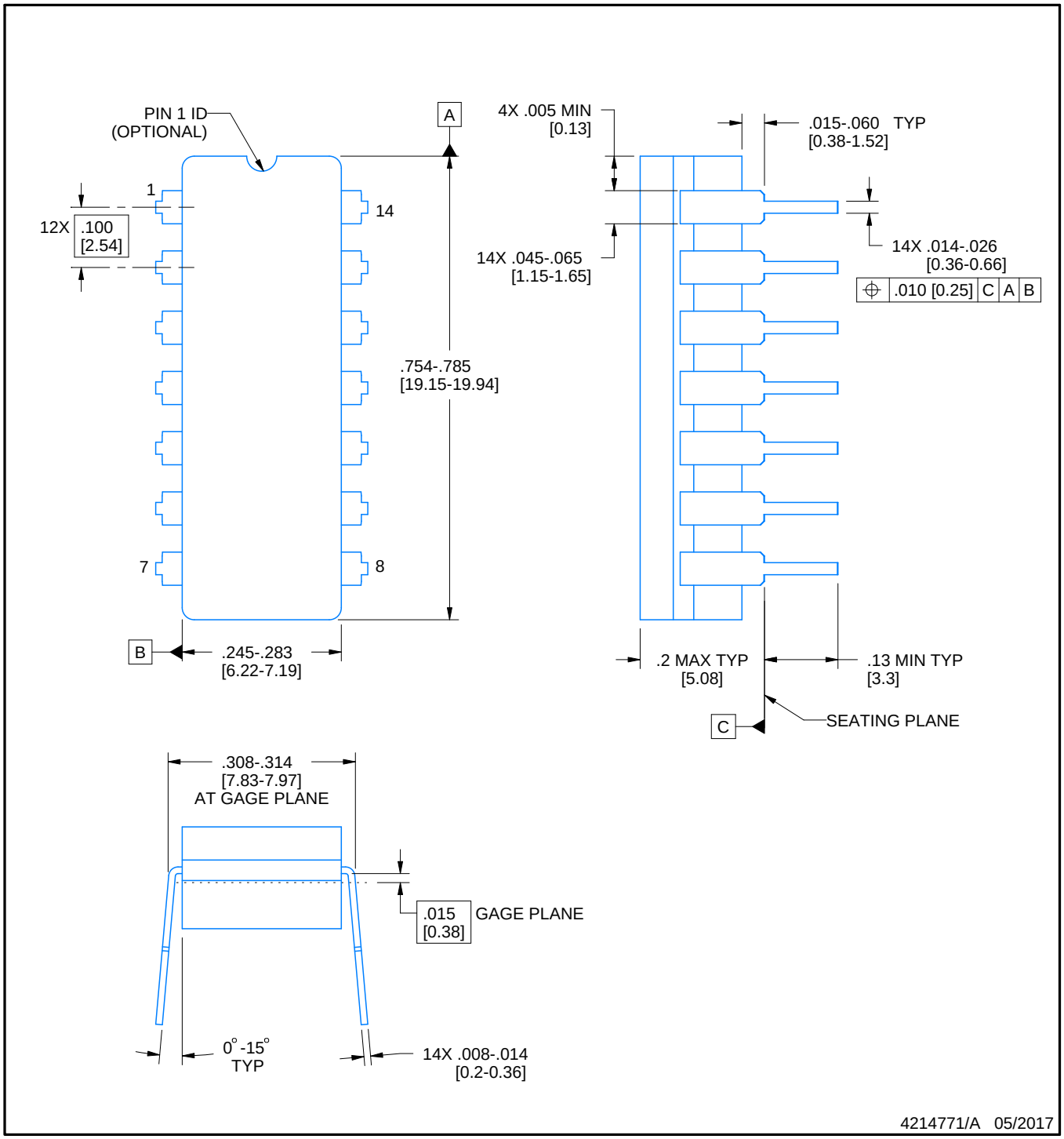

NOTES:

1. All controlling linear dimensions are in inches. Dimensions in brackets are in millimeters. Any dimension in brackets or parenthesis are for reference only. Dimensioning and tolerancing per ASME Y14.5M.
2. This drawing is subject to change without notice.
3. This package is hermitically sealed with a ceramic lid using glass frit.
4. Index point is provided on cap for terminal identification only and on press ceramic glass frit seal only.
5. Falls within MIL-STD-1835 and GDIP1-T14.

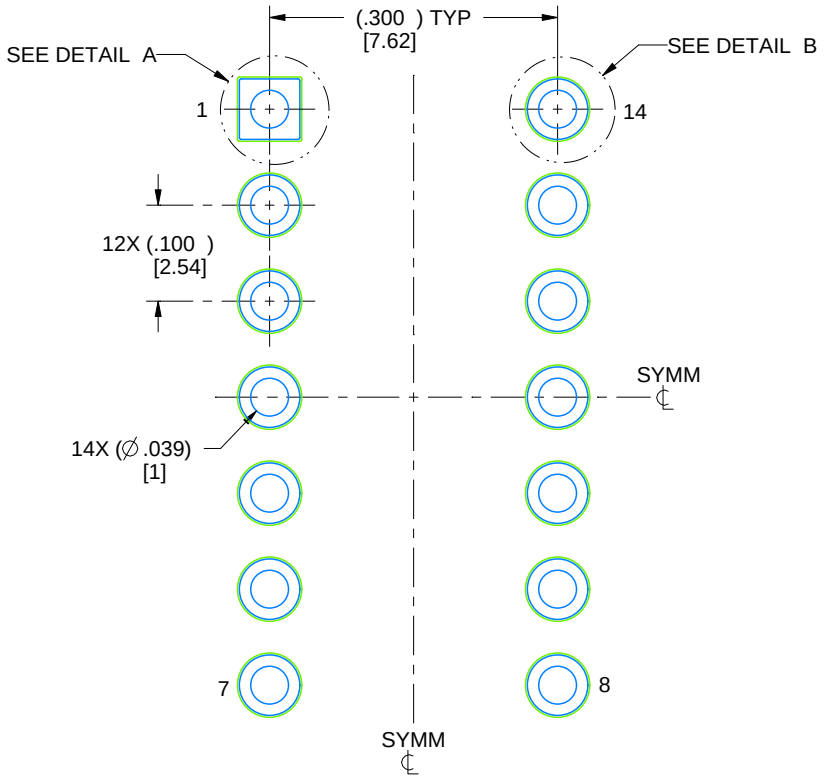

LAND PATTERN EXAMPLE
NON-SOLDER MASK DEFINED
SCALE: 5X

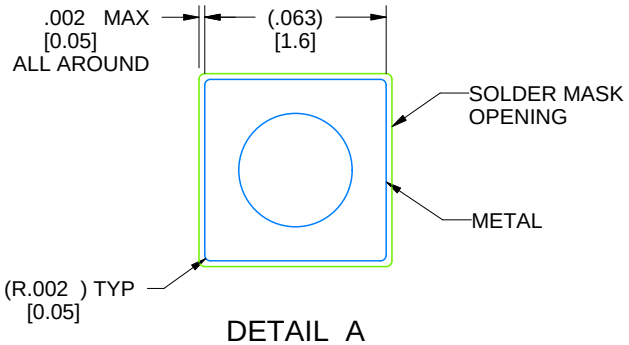

DETAIL A
SCALE: 15X

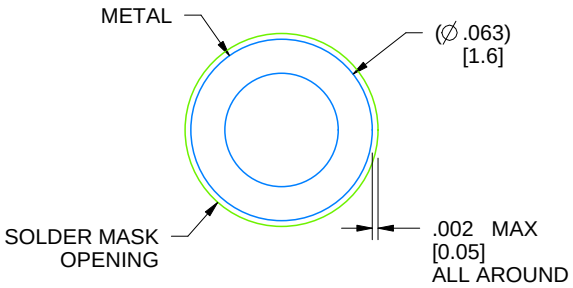

DETAIL B
13X, SCALE: 15X

4214771/A 05/2017

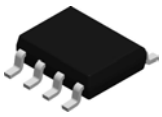

PACKAGE OUTLINE

D0008A

SOIC - 1.75 mm max height

SMALL OUTLINE INTEGRATED CIRCUIT

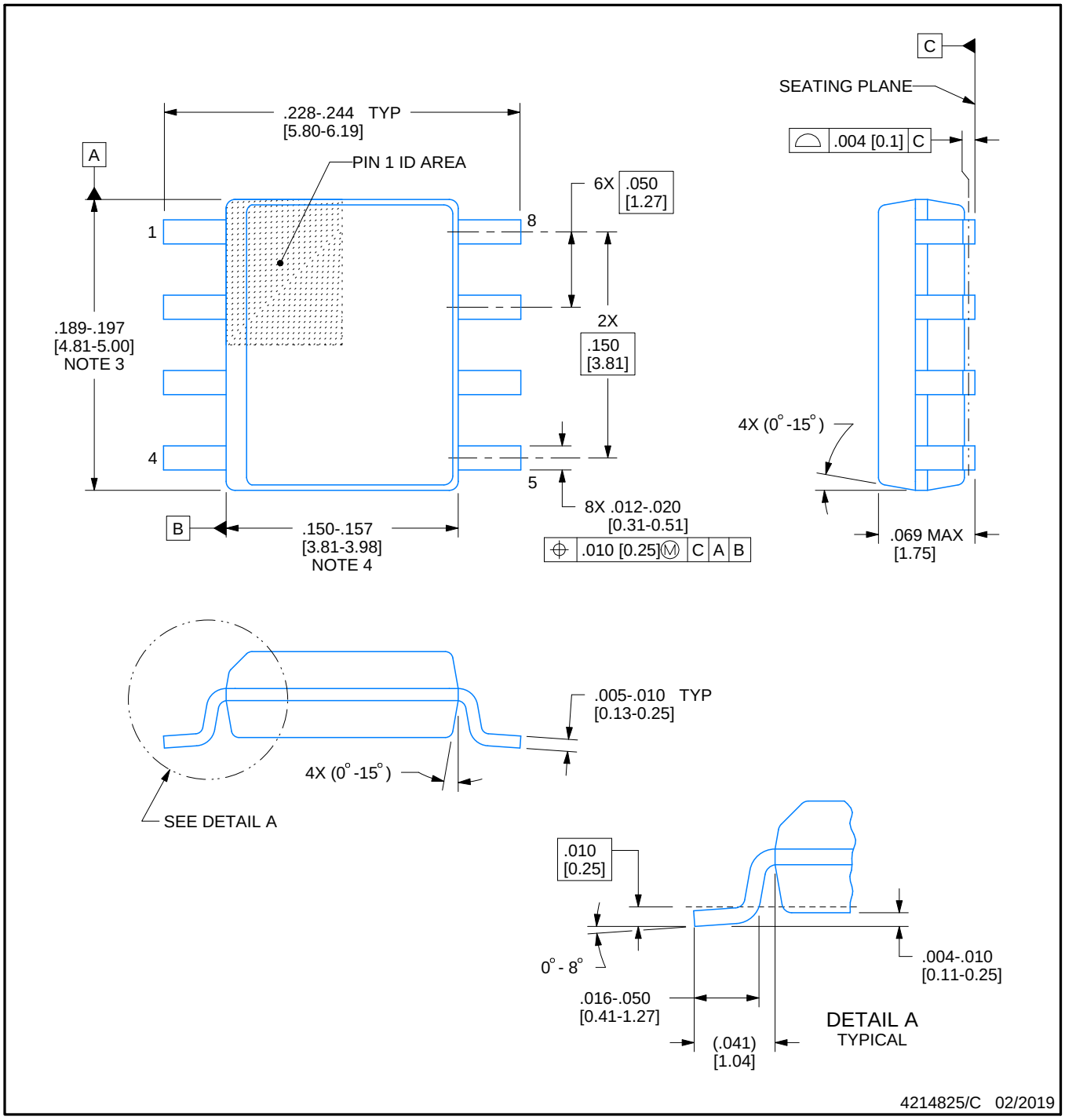

NOTES:

1. Linear dimensions are in inches [millimeters]. Dimensions in parenthesis are for reference only. Controlling dimensions are in inches. Dimensioning and tolerancing per ASME Y14.5M.
2. This drawing is subject to change without notice.
3. This dimension does not include mold flash, protrusions, or gate burrs. Mold flash, protrusions, or gate burrs shall not exceed .006 [0.15] per side.
4. This dimension does not include interlead flash.
5. Reference JEDEC registration MS-012, variation AA.

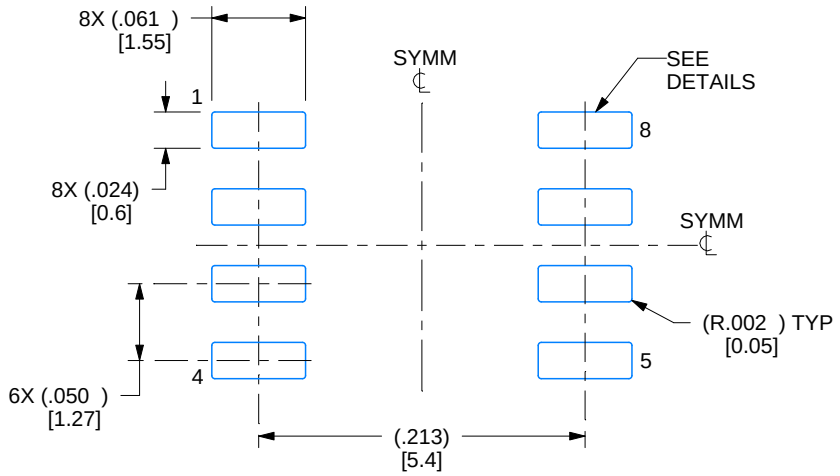

LAND PATTERN EXAMPLE
EXPOSED METAL SHOWN
SCALE:8X

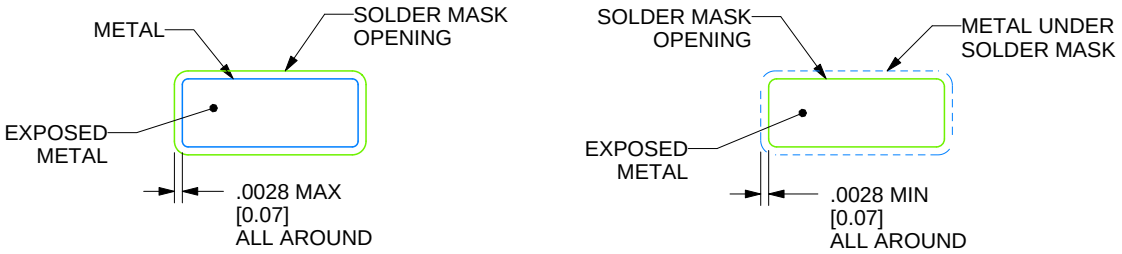

SOLDER MASK DETAILS

4214825/C 02/2019

NOTES: (continued)

6. Publication IPC-7351 may have alternate designs.
7. Solder mask tolerances between and around signal pads can vary based on board fabrication site.

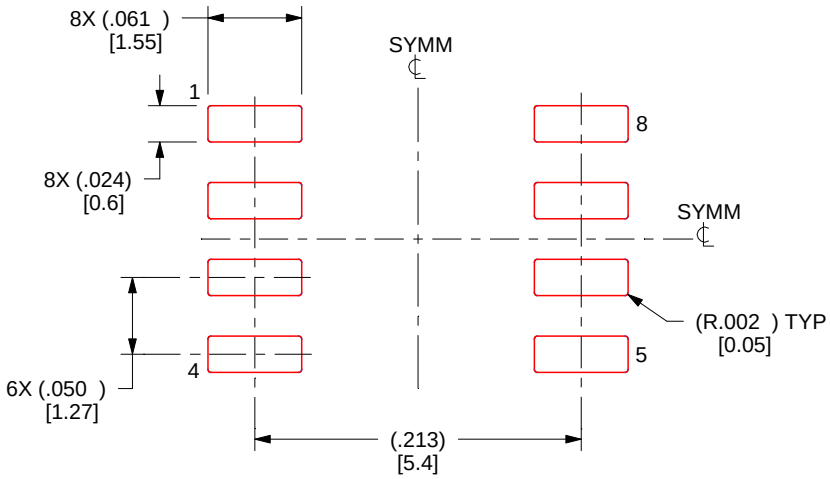

SOLDER PASTE EXAMPLE
BASED ON .005 INCH [0.125 MM] THICK STENCIL
SCALE:8X

4214825/C 02/2019

NOTES: (continued)

8. Laser cutting apertures with trapezoidal walls and rounded corners may offer better paste release. IPC-7525 may have alternate design recommendations.
9. Board assembly site may have different recommendations for stencil design.

JG (R-GDIP-T8) **CERAMIC DUAL-IN-LINE**

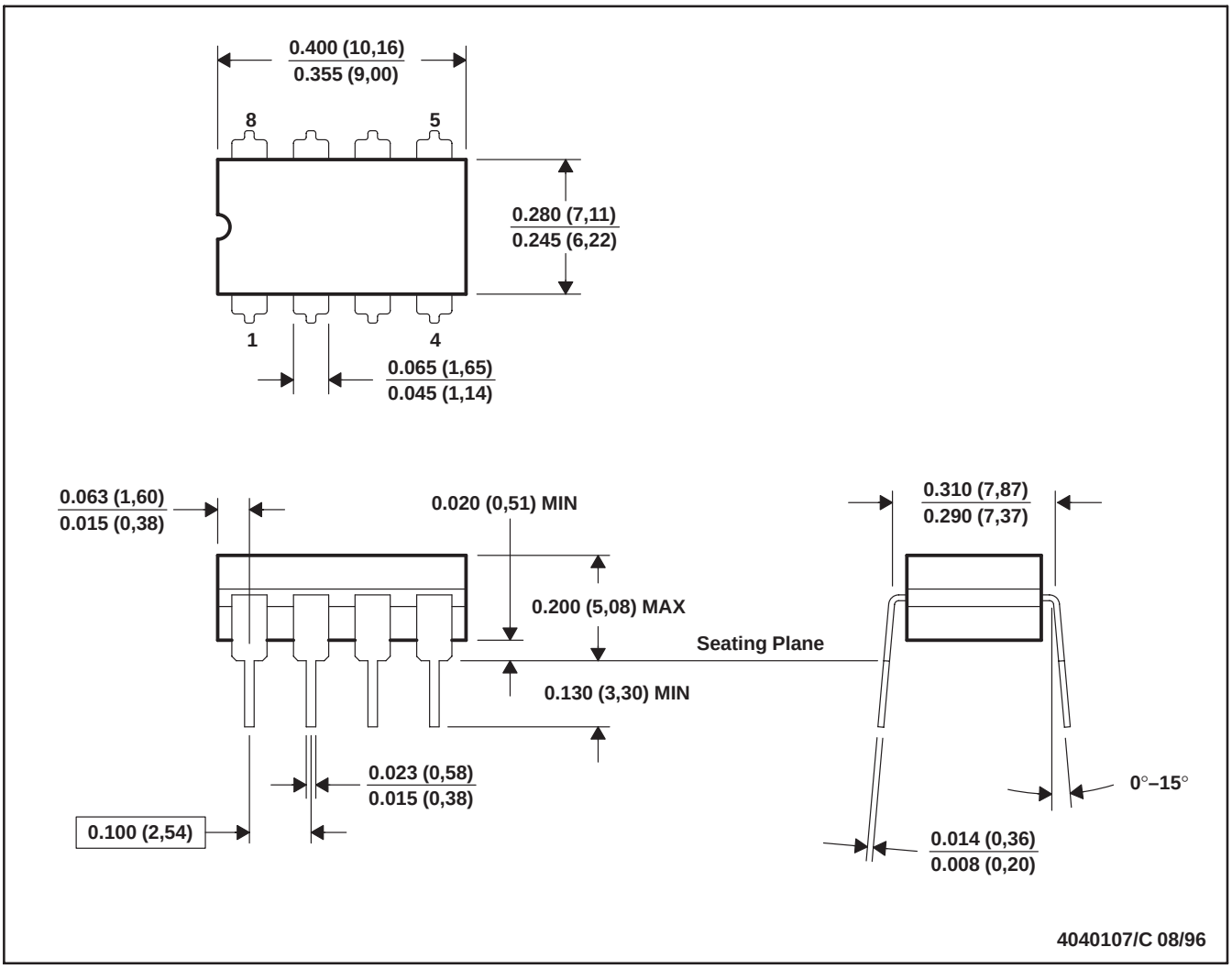

NOTES: A. All linear dimensions are in inches (millimeters).
B. This drawing is subject to change without notice.
C. This package can be hermetically sealed with a ceramic lid using glass frit.
D. Index point is provided on cap for terminal identification.
E. Falls within MIL STD 1835 GDIP1-T8

P (R–PDIP–T8) PLASTIC DUAL–IN–LINE PACKAGE

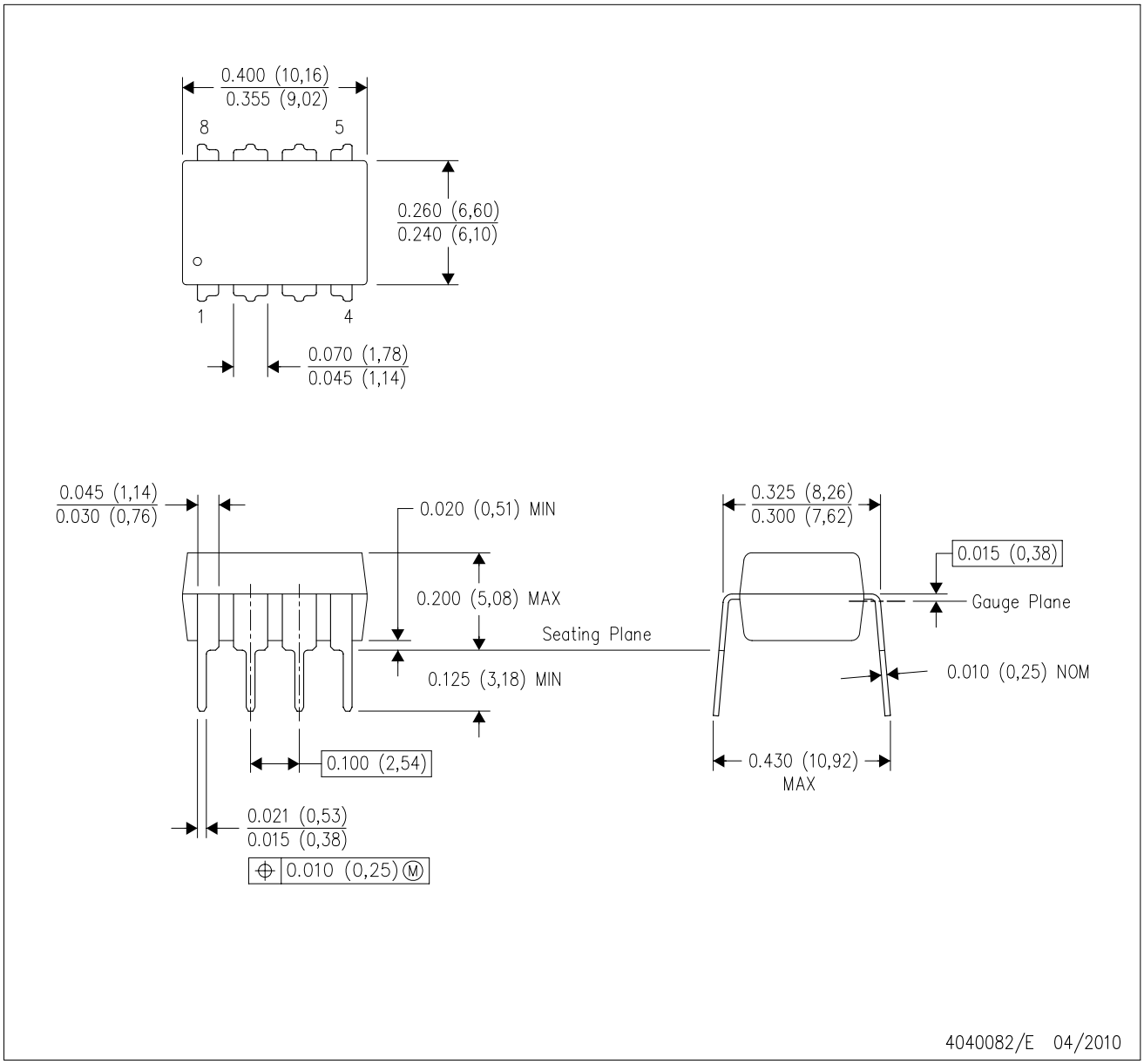

NOTES:
A. All linear dimensions are in inches (millimeters).
B. This drawing is subject to change without notice.
C. Falls within JEDEC MS–001 variation BA.

N (R–PDIP–T**) PLASTIC DUAL–IN–LINE PACKAGE

16 PINS SHOWN

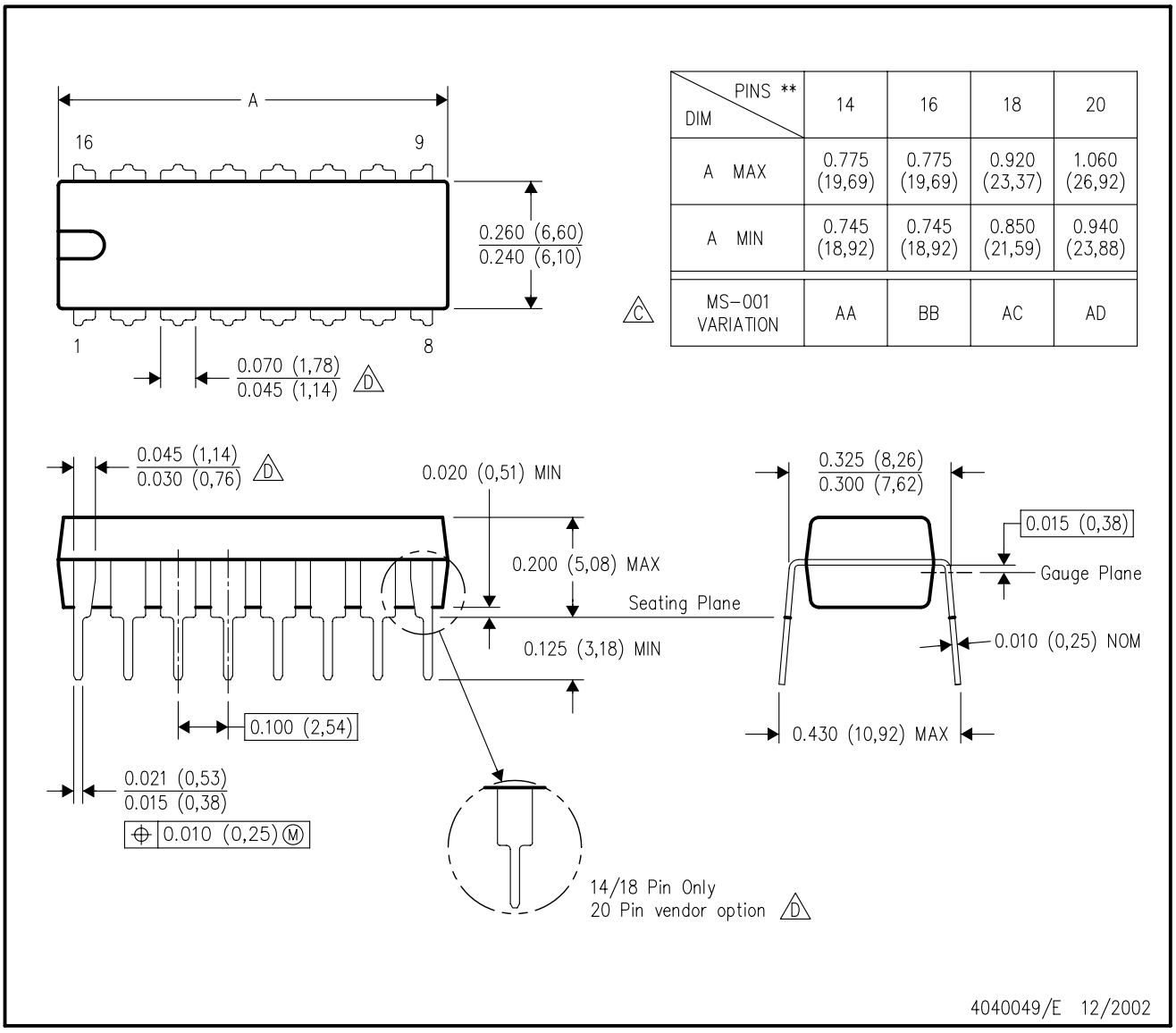

DIM \ PINS **	14	16	18	20
A MAX	0.775 (19,69)	0.775 (19,69)	0.920 (23,37)	1.060 (26,92)
A MIN	0.745 (18,92)	0.745 (18,92)	0.850 (21,59)	0.940 (23,88)
MS–001 VARIATION (C)	AA	BB	AC	AD

NOTES:
A. All linear dimensions are in inches (millimeters).
B. This drawing is subject to change without notice.
C. Falls within JEDEC MS–001, except 18 and 20 pin minimum body length (Dim A).
D. The 20 pin end lead shoulder width is a vendor option, either half or full width.

FK (S–CQCC–N**) LEADLESS CERAMIC CHIP CARRIER

28 TERMINAL SHOWN

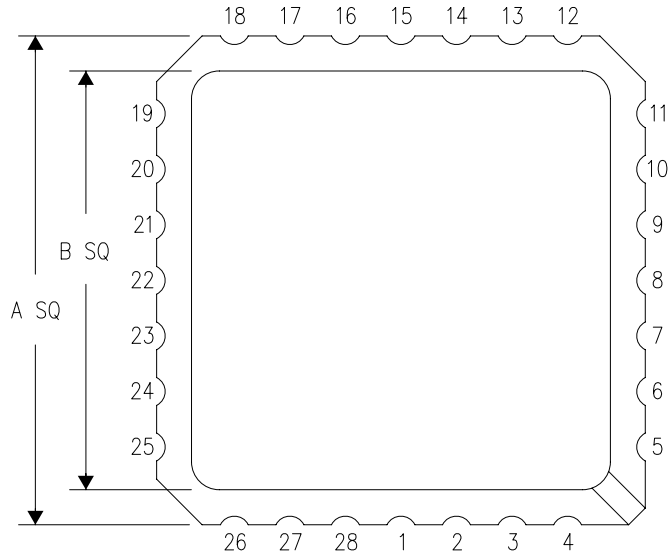

NO. OF TERMINALS **	A		B	
	MIN	MAX	MIN	MAX
20	0.342 (8,69)	0.358 (9,09)	0.307 (7,80)	0.358 (9,09)
28	0.442 (11,23)	0.458 (11,63)	0.406 (10,31)	0.458 (11,63)
44	0.640 (16,26)	0.660 (16,76)	0.495 (12,58)	0.560 (14,22)
52	0.740 (18,78)	0.761 (19,32)	0.495 (12,58)	0.560 (14,22)
68	0.938 (23,83)	0.962 (24,43)	0.850 (21,6)	0.858 (21,8)
84	1.141 (28,99)	1.165 (29,59)	1.047 (26,6)	1.063 (27,0)

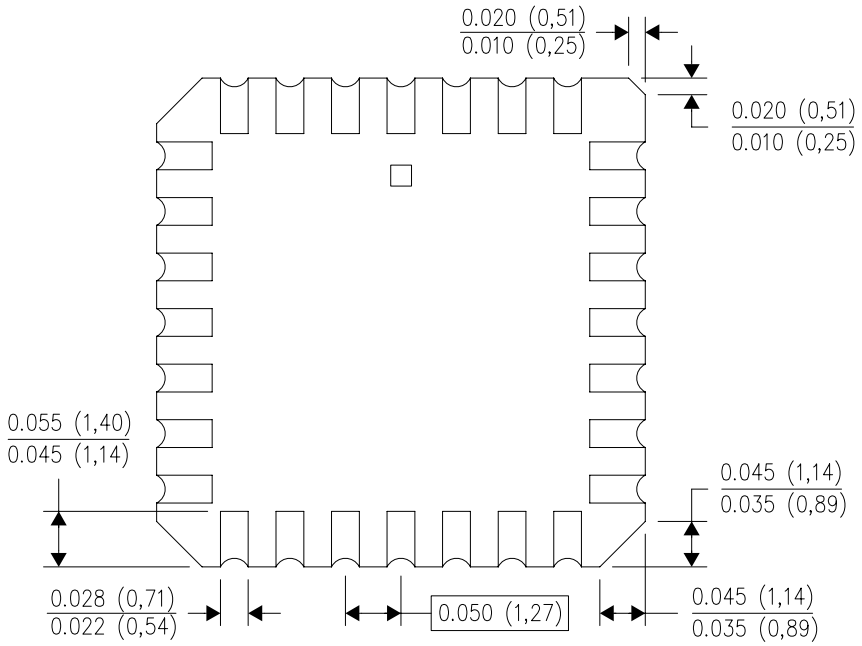

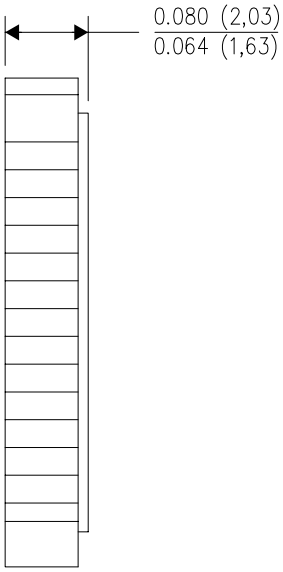

4040140/D 01/11

NOTES:
A. All linear dimensions are in inches (millimeters).
B. This drawing is subject to change without notice.
C. This package can be hermetically sealed with a metal lid.
D. Falls within JEDEC MS–004

IMPORTANT NOTICE AND DISCLAIMER

TI PROVIDES TECHNICAL AND RELIABILITY DATA (INCLUDING DATASHEETS), DESIGN RESOURCES (INCLUDING REFERENCE DESIGNS), APPLICATION OR OTHER DESIGN ADVICE, WEB TOOLS, SAFETY INFORMATION, AND OTHER RESOURCES “AS IS” AND WITH ALL FAULTS, AND DISCLAIMS ALL WARRANTIES, EXPRESS AND IMPLIED, INCLUDING WITHOUT LIMITATION ANY IMPLIED WARRANTIES OF MERCHANTABILITY, FITNESS FOR A PARTICULAR PURPOSE OR NON-INFRINGEMENT OF THIRD PARTY INTELLECTUAL PROPERTY RIGHTS.

These resources are intended for skilled developers designing with TI products. You are solely responsible for (1) selecting the appropriate TI products for your application, (2) designing, validating and testing your application, and (3) ensuring your application meets applicable standards, and any other safety, security, or other requirements. These resources are subject to change without notice. TI grants you permission to use these resources only for development of an application that uses the TI products described in the resource. Other reproduction and display of these resources is prohibited. No license is granted to any other TI intellectual property right or to any third party intellectual property right. TI disclaims responsibility for, and you will fully indemnify TI and its representatives against, any claims, damages, costs, losses, and liabilities arising out of your use of these resources.

TI’s products are provided subject to TI’s Terms of Sale (www.ti.com/legal/termsofsale.html) or other applicable terms available either on ti.com or provided in conjunction with such TI products. TI’s provision of these resources does not expand or otherwise alter TI’s applicable warranties or warranty disclaimers for TI products.

Mailing Address: Texas Instruments, Post Office Box 655303, Dallas, Texas 75265
Copyright © 2019, Texas Instruments Incorporated